LEGENDA/LEGEND

Simbol	Denumire	Simbol	Denumire
B1 / 95.218	BORNA RETEA DE INDESIRE/ BENCHMARK OF THE SECONDARY NETWORK	78.658	PUNCT RADIAT/ RADIATED POINT
501 / 95.218	REPER DE NIVELMENT DE BAZA/ REFERENCE BASE LEVEL	67+251.00	PICHET/ STAKE
501 / 95.218	REPER DE NIVELMENT TEHNIC/ REFERENCE TECHNICAL LEVEL	NR 7/8 TIP49; NR 6 TIP49; NR 6 TIP49	SCHIMBATORE DE CALE/ SWITCH
km 3 / 3,5	BORNA KILOMETRICA-HECTOMETRICA/ KILOMETRIC-HECTOMETRIC BENCHMARK		
Bz	BORNA ZONA CF/ BENCHMARK OF THE RAILWAY AREA		
K	BORNA CABLU/ CABLE BENCHMARK		STALP DIN LEMN/ WOOD POLE
Fo	BORNA FIBRA OPTICA/ OPTICAL FIBER BENCHMARK		STALP DIN BETON/ CONCRETE POLE
MF	MUFA CABLU/ CABLE BOX		STALP DIN METAL/ METAL POLE
	CUTIE CABLU/ CABLE BOX		LAMPADAR PE ALEI/ LAMPADAR ON SIDE STRET
C.cv.	COLOANA CONVORBIRE/ CONVERSATION COLUMN		STALP INALTA TENSIUNE/ POWER-LINE TOWER
	MARCA DE SIGURANTA/ SAFETY MARK	SE 120	STALP ELECTRIC DIN BETON/ CONCRETE ELECTRIC POLE
	SEMNAL LUMINOS PE STALP/ LIGHT SIGNAL ON POLE	SE 120	STALP ELECTRIC DIN METAL/ METALLIC ELECTRIC POLE
	SEMNAL LUMINOS PITIC/ SMALL TRAFFIC LIGHTER		STALP DIFUZOR/ LOUD-SPEAKER POLE
	AVERTIZOR PENTRU TRECERE LA NIVEL/ WARNING DEVICE FOR LEVEL CROSSING		SUSTINERE LINIE DE CONTACT/ CONTACT WIRE
	BARIERA/ RAILWAY GATE		ANCORA SUSTINERE STALP/ POLE ANCHOR
	CRUCE/ CROSS		LIMITA ZONA CFR INTABULATA/ LIMITED CFR AREA INCLUDED
	CUTIE DIN FONTA GAZE/ GAS FONT BOX		LIMITA UAT/ UAT LIMIT
	CAMIN DE VIZITARE TELEFON/ PHONE MANHOLE		SUPRAFATA NECESARA PROIECTULUI/ NECESSARY PROJECT SURFACE
	CAMIN DE VIZITARE CANAL/ SEWERAGE MANHOLE		CADSTRE VECINE/ NEIGHBORHOOD
	GURA DE AERISIRE CANALIZARE/ MOUTH VENTING SEWAGE		AX CF/ RAILWAY LINE AXE
	CAMIN DE VIZITARE APA/ WATER MANHOLE		TALUZ SUS/ SOIL SLOPE UP
	MARTOR GAZE/ GAS TELLTALE		TALUZ JOS/ SOIL SLOPE DOWN
	PANOU ELECTRIC/ ELECTRIC PANEL		SANT DE SCURGERE A APELOR SUS/ DRAIN DITCH UP
	HIDRANT/ HYDRANT		SANT DE SCURGERE A APELOR JOS/ DRAIN DITCH DOWN
	GEIGER/ GEIGER		GARD DIN BETON/ CONCRETE FENCE
	FANTANA/ FOUNTAIN		GARD DIN LEMN/ WOOD FENCE
	CISMEA/ DRINKING FOUNTAIN		GARD DIN METAL/ METAL FENCE
	POM/ TREE		GARD DIN PLASA/ CHAIN-LINK FENCE
	STALP POARTA/ GATE POLE		GARD DIN SARMA/ BARBED WIRE FENCE
	OPRITOR CF/ CATCHER OF RAILWAY LINE		GARD VIU-LIMITA PADURE/ GREEN FENCE-FOREST LIMIT
JIL	JOANTA IZOLATA DE LEGATURA/ INSULATING JOINT		ZID SUS/ UP WALL
49/65	SCHIMBARE TIP SINA DE CALE FERATA/ RAIL TYPE CHANGE		ZID JOS/ DOWN WALL
trav beton/lemn	SCHIMBARE TIP DE TRAVERSE/ SLEEPER TYPE CHANGE		RIGOLA/ CREVICE
CED	DULAP CENTRALIZARE ELECTRODINAMICA/ SWITCH ELECTRODINAMIC CENTRALIZATION		RAU/ RIVER
	TRANSFORMATOR ELECTRIC PE STALP/ POLE ELECTRICAL TRANSFORMER		
	INDICATOR/ ROAD SIGN		

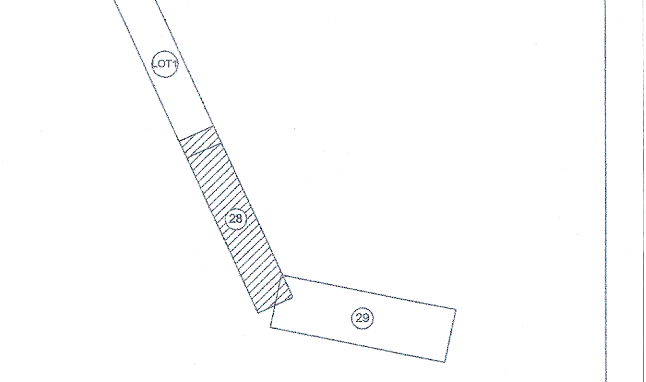

CERTIFICAT DE AUTORIZARE Seria RO-B-J Nr. 0684 S.C. VIO-TOP S.R.L.

CERTIFICAT DE AUTORIZARE Seria RO-B-F, Nr. 1650 Maria Gina UNGUREANU CATEGORIA A

NOTA: SISTEM DE PROIECTIE STEREOGRAFIC 1970
SISTEM DE REFERINȚĂ PENTRU COTE "0" MAREA NEAGRĂ 1975

NOTE: STEREOGRAPHIC PROJECT SYSTEM 1970
REFERENCE SYSTEM FOR QUOTES "0" BLACK SEA 1975

CENTRUL NAȚIONAL DE CARTOGRAFIE Prezentul document este însoțit de procesul-verbal de recepție nr. 3 data 30.03.2018 ... DOGARU - Coordonator comisie recepție C.N.C.

PROIECT FINANȚAT DE UNIUNEA EUROPEANĂ / EUROPEAN UNION FINANCED PROJECT — GUVERNUL ROMÂNIEI / GOVERNMENT OF ROMANIA

BENEFICIAR/ BENEFICIARY:	COMPANIA NAȚIONALĂ DE CĂI FERATE "C.F.R." S.A. / ROMANIAN RAILWAY NATIONAL COMPANY			
PROIECTANT/ DESIGNER: ASOCIEREA/ JOINT VENTURE:	B & acciona ingeniería; J40/9877/2001; J40/20534/2004		DENUMIRE PROIECT/ DENUMIRE LUCRARE: PROJECT TITLE/ WORKS TITLE:	"MODERNIZAREA LINIEI CF BUCUREȘTI NORD-JILAVA-GIURGIU NORD-GIURGIU NORD FRONTIERĂ" Lot 2 - MODERNIZAREA INFRASTRUCTURII DE CALE FERATA DINTRE STATIILE CF BUCURESTI NORD - GIURGIU NORD - GIURGIU FRONTIERA "MODERNIZATION OF THE RAILWAY LINE BUCHAREST NORTH JILAVA - GIURGIU NORTH - GIURGIU NORTH BORDER" LOT 2 - MODERNIZATION OF RAILWAY INFRASTRUCTURE BETWEEN RAILWAY STATIONS BUCHAREST NORD-GIURGIU NORTH-GIURGIU BORDER
SUBCONTRACTANT/ SUBCONTRACTOR:	S.C. VIOTOP SRL J/40/4967/1999			
	NUME/NAME	SEMNATURA/ SIGNATURE	SPECIALITATE/ SPECIALITY	STUDIU TOPOGRAFIC / TOPOGRAPHICAL STUDY
PROIECTANT/ DESIGNER	Ing. R. BURCEA			
EXPERT CHEIE/ KEY EXPERT	Ing. G.UNGUREANU		DENUMIRE PLAN/ DRAWING TITLE	PLAN DE SITUATIE/LAYOUT PLAN INTERVAL CF GRADISTEA-COMANA/ GRADISTEA-COMANA SECTION
MP/PM	Ing. G.UNGUREANU			
DATA/DATE: 01.2018		SCARA/SCALE: 1:1000	EXEMPLAR NR./ EXEMPLARY NO. 1	COD PLAN/CODIFICATION SYSTEM: ST 207 Lot 2 17 ST 28 00