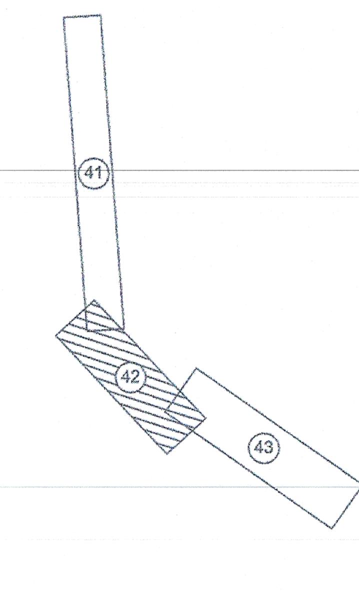

LEGENDA/LEGEND

Simbol	Descriere	Simbol	Descriere
B1 95.218	BORNA RETEA DE INDESIRE/ BENCHMARK OF THE SECONDARY NETWORK	o78.658	PUNCT RADIAT/ RADIATED POINT
501 95.218	REPER DE NIVELMENT DE BAZA/ REFERENCE BASE LEVEL	67+251.00	PICHET/ STAKE
501 95.218	REPER DE NIVELMENT TEHNIC/ REFERENCE TECHNICAL LEVEL		SCHIMBATORE DE CALE/ SWITCH
km3 3.5	BORNA KILOMETRICA-HECTOMETRICA/ KILOMETRIC-HECTOMETRIC BENCHMARK		
Bz	BORNA ZONA CF/ BENCHMARK OF THE RAILWAY AREA		
K	BORNA CABLU/ CABLE BENCHMARK		STALP DIN LEMN/ WOOD POLE
Fo	BORNA FIBRA OPTICA/ OPTICAL FIBER BENCHMARK		STALP DIN BETON/ CONCRETE POLE
MF	MUFA CABLU/ CABLE BOX		STALP DIN METAL/ METAL POLE
	CUTIE CABLU/ CABLE BOX		LAMPADAR PE ALEI/ LAMPADAR ON SIDE STRET
C.CV.	COLOANA CONVORBIRE/ CONVERSATION COLUMN		STALP INALTA TENSIUNE/ POWER-LINE TOWER
	MARCA DE SIGURANTA/ SAFETY MARK	SE 120	STALP ELECTRIC DIN BETON/ CONCRETE ELECTRIC POLE
	SEMNAL LUMINOS PE STALP/ LIGHT SIGNAL ON POLE	SE 120	STALP ELECTRIC DIN METAL/ METALLIC ELECTRIC POLE
	SEMNAL LUMINOS PITIC/ SMALL TRAFFIC LIGHTER		STALP DIFUZOR/ LOUD-SPEAKER POLE
	AVERTIZOR PENTRU TRECERE LA NIVEL/ WARNING DEVICE FOR LEVEL CROSSING		SUSTINERE LINIE DE CONTACT/ CONTACT WIRE
	BARIERA/ RAILWAY GATE		ANCORA SUSTINERE STALP/ POLE ANCHOR
	CRUCE/ CROSS		LIMITA ZONA CFR INTABULATA/ LIMITED CFR AREA INCLUDED
	CUTIE DIN FONTA GAZE/ GAS FONT BOX		LIMITA UAT/ UAT LIMIT
	CAMIN DE VIZITARE TELEFON/ PHONE MANHOLE		SUPRAFATA NECESARA PROIECTULUI/ NECESSARY PROJECT SURFACE
	CAMIN DE VIZITARE CANAL/ SEWERAGE MANHOLE		CADSTRE VECINE/ NEIGHBORHOOD
	GURA DE AERISIRE CANALIZARE/ MOUTH VENTING SEWAGE		AX CF/ RAILWAY LINE AXE
	CAMIN DE VIZITARE APA/ WATER MANHOLE		TALUZ SUS/ SOIL SLOPE UP
	MARTOR GAZE/ GAS TELLTALE		TALUZ JOS/ SOIL SLOPE DOWN
	PANOU ELECTRIC/ ELECTRIC PANEL		SANT DE SCURGERE A APELOR SUS/ DRAIN DITCH UP
	HIDRANT/ HYDRANT		SANT DE SCURGERE A APELOR JOS/ DRAIN DITCH DOWN
	GEIGER/ GEIGER		GARD DIN BETON/ CONCRETE FENCE
	FANTANA/ FOUNTAIN		GARD DIN LEMN/ WOOD FENCE
	CISMEA/ DRINKING FOUNTAIN		GARD DIN METAL/ METAL FENCE
	POM/ TREE		GARD DIN PLASA/ CHAIN-LINK FENCE
	STALP POARTA/ GATE POLE		GARD DIN SARMA/ BARBED WIRE FENCE
	OPRITOR CF/ CATCHER OF RAILWAY LINE		GARD VIU-LIMITA PADURE/ GREEN FENCE-FOREST LIMIT
JIL	JOANTA IZOLATA DE LEGATURA/ INSULATING JOINT		ZID SUS/ UP WALL
49/65	SCHIMBARE TIP SINA DE CALE FERATA/ RAIL TYPE CHANGE		ZID JOS/ DOWN WALL
trav beton/lemn	SCHIMBARE TIP DE TRAVERSE/ SLEEPER TYPE CHANGE		RIGOLA/ CREVICE
CED	DULAP CENTRALIZARE ELECTRODINAMICA/ SWITCH ELECTRODINAMIC CENTRALIZATION		RAU/ RIVER
	TRANSFORMATOR ELECTRIC PE STALP/ POLE ELECTRICAL TRANSFORMER		
	INDICATOR/ ROAD SIGN		

NOTA: SISTEM DE PROIECTIE STEREOGRAFIC 1970
SISTEM DE REFERINȚĂ PENTRU COTE "0" MAREA NEAGRĂ 1975

NOTE: STEREOGRAPHIC PROJECT SYSTEM 1970
REFERENCE SYSTEM FOR QUOTES "0" BLACK SEA 1975

CERTIFICAT DE AUTORIZARE Seria RO-B-F Nr. 1650 Maria Gina UNGUREANU

CERTIFICAT DE AUTORIZARE Seria RO-B-J Nr. 0684 S.C. VIO - TOP S.R.L.

CENTRUL NAȚIONAL DE CARTOGRAFIE
Prezentul document este inclus în procesul verbal de recepție
nr. 3 din 30.03.2018
Ing. DOGARU - Coordonator compartiment recepție C.N.C.

PROIECT FINANȚAT DE UNIUNEA EUROPEANĂ
EUROPEAN UNION FINANCED PROJECT

GUVERNUL ROMÂNIEI
GOVERNMENT OF ROMANIA

BENEFICIAR/ BENEFICIARY: COMPANIA NAȚIONALĂ DE CĂI FERATE "C.F.R." S.A.
ROMANIAN RAILWAY NATIONAL COMPANY

PROIECTANT/ DESIGNER:
ASOCIEREA/ JOINT VENTURE: J40/9877/2001 & acciona J40/20534/2004
SUBCONTRACTANT/ S.C. VIOTOP SRL
SUBCONTRACTOR: J/40/4967/1999

DENUMIRE PROIECT/ DENUMIRE LUCRARE: "MODERNIZAREA LINIEI CF BUCUREȘTI NORD-JILAVA-GIURGIU NORD-GIURGIU NORD FRONTIERĂ"
Lot 2 - MODERNIZAREA INFRASTRUCTURII DE CALE FERATA DINTRE STATIILE CF BUCURESTI NORD - GIURGIU NORD - GIURGIU FRONTIERA
"MODERNIZATION OF THE RAILWAY LINE BUCHAREST NORTH - JILAVA - GIURGIU NORTH - GIURGIU NORTH BORDER"
PROJECT TITLE/ WORKS TITLE: LOT 2 - MODERNIZATION OF RAILWAY INFRASTRUCTURE BETWEEN RAILWAY STATIONS BUCHAREST NORD-GIURGIU NORTH-GIURGIU BORDER

	NUME/NAME	SEMNATURA/ SIGNATURE
PROIECTANT/ DESIGNER	Ing. R. BURCEA	
EXPERT CHEIE/ KEY EXPERT	Ing. G.UNGUREANU	
MP/PM	Ing. G.UNGUREANU	

SPECIALITATE/ SPECIALITY: STUDIU TOPOGRAFIC / TOPOGRAPHICAL STUDY

DENUMIRE PLAN/ DRAWING TITLE: PLAN DE SITUATIE/LAYOUT PLAN HALTA TABANU/TABANU HALT

DATA/DATE:	SCARA/SCALE:	EXEMPLAR NR./ EXEMPLARY NO.	COD PLAN/CODIFICATION SYSTEM:
01.2018	1:1000	1	ST 207 Lot 2 26 ST 42 00