LEGENDA/LEGEND

- BORNA RETEA DE INDESIRE/ BENCHMARK OF THE SECONDARY NETWORK
- REPER DE NIVELMENT DE BAZA/ REFERENCE BASE LEVEL
- REPER DE NIVELMENT TEHNIC/ REFERENCE TECHNICAL LEVEL
- BORNA KILOMETRICA-HECTOMETRICA/ KILOMETRIC-HECTOMETRIC BENCHMARK
- BORNA ZONA CF/ BENCHMARK OF THE RAILWAY AREA
- BORNA CABLU/ CABLE BENCHMARK
- BORNA FIBRA OPTICA/ OPTICAL FIBER BENCHMARK
- MUFA CABLU/ CABLE BOX
- CUTIE CABLU/ CABLE BOX
- COLOANA CONVORBIRE/ CONVERSATION COLUMN
- MARCA DE SIGURANTA/ SAFETY MARK
- SEMNAL LUMINOS PE STALP/ LIGHT SIGNAL ON POLE
- SEMNAL LUMINOS PITIC/ SMALL TRAFFIC LIGHTER
- AVERTIZOR PENTRU TRECERE LA NIVEL/ WARNING DEVICE FOR LEVEL CROSSING
- BARIERA/ RAILWAY GATE
- CRUCE/ CROSS
- CUTIE DIN FONTA GAZE/ GAS FONT BOX
- CAMIN DE VIZITARE TELEFON/ PHONE MANHOLE
- CAMIN DE VIZITARE CANAL/ SEWERAGE MANHOLE
- GURA DE AERISIRE CANALIZARE/ MOUTH VENTING SEWAGE
- CAMIN DE VIZITARE APA/ WATER MANHOLE
- MARCAJ GAZE/ GAS TELLTALE
- PANOU ELECTRIC/ ELECTRIC PANEL
- HIDRANT/ HYDRANT
- GEIGER/ GEIGER
- FANTANA/ FOUNTAIN
- CISMEA/ DRINKING FOUNTAIN
- POM/ TREE
- STALP POARTA/ GATE POLE
- OPRITOR CF/ GREASER OF RAILWAY LINE
- JOANTA IZOLATA DE LEGATURA/ INSULATING JOINT
- SCHIMBARE TIP SINA DE CALE FERATA/ RAIL TYPE CHANGE
- SCHIMBARE TIP DE TRAVERSE/ SLEEPER TYPE CHANGE
- DULAP CENTRALIZARE ELECTRODINAMICA/ SWITCH ELECTRODINAMIC CENTRALIZATION
- TRANSFORMATOR ELECTRIC PE STALP/ POLE ELECTRICAL TRANSFORMER
- INDICATOR/ ROAD SIGN
- PUNCT RADIAT/ RADIATED POINT
- PICHET/ STAKE
- SCHIMBATOARE DE CALE/ SWITCH
- STALP DIN LEMN/ WOOD POLE
- STALP DIN BETON/ CONCRETE POLE
- STALP DIN METAL/ METAL POLE
- LAMPADAR PE ALEI/ LAMPADAR ON SIDE STRET
- STALP INALTA TENSIUNE/ POWER-LINE TOWER
- STALP ELECTRIC DIN BETON/ CONCRETE ELECTRIC POLE
- STALP ELECTRIC DIN METAL/ METALLIC ELECTRIC POLE
- STALP DIFUZOR/ LOUD-SPEAKER POLE
- SUSTINERE LINIE DE CONTACT/ CONTACT WIRE
- ANCORA SUSTINERE STALP/ POLE ANCHOR
- LIMITA ZONA CFR INTABULATA/ LIMITED CFR AREA INCLUDED
- LIMITA UAT/ UAT LIMIT
- SUPRAFATA NECESARA PROIECTULUI/ NECESSARY PROJECT SURFACE
- CARTIER VECINAT/ NEIGHBORHOOD
- AX CF/ RAILWAY LINE AXE
- TALUZ SUS/ SOIL SLOPE UP
- TALUZ JOS/ SOIL SLOPE DOWN
- SANT DE SCURGERE A APELOR SUS/ DRAIN DITCH UP
- SANT DE SCURGERE A APELOR JOS/ DRAIN DITCH DOWN
- GARD DIN BETON/ CONCRETE FENCE
- GARD DIN LEMN/ WOOD FENCE
- GARD DIN METAL/ METAL FENCE
- GARD DIN PLASA/ CHAIN-LINK FENCE
- GARD DIN SARMA/ BARBED WIRE FENCE
- GARD VIU-LIMITA PADURE/ GREEN FENCE-FOREST LIMIT
- ZID SUS/ UP WALL
- ZID JOS/ DOWN WALL
- RIGOLA/ CREVICE
- RAU/ RIVER

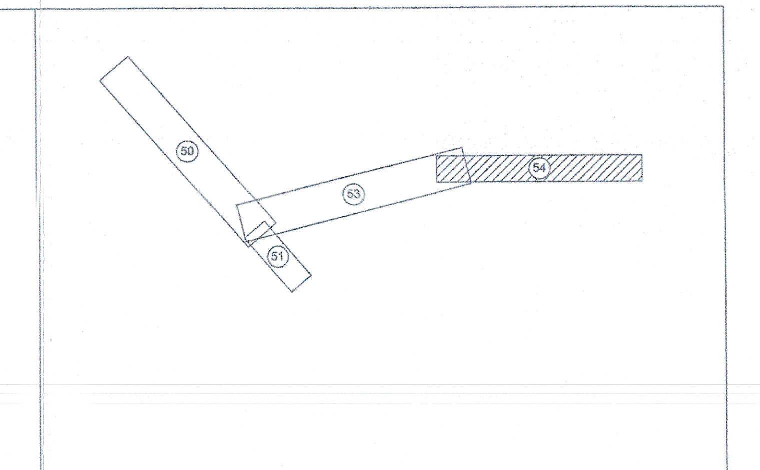

NOTA: SISTEM DE PROIECTIE STEREOGRAFIC 1970
SISTEM DE REFERINTA PENTRU COTE "0" MAREA NEAGRA 1975

NOTE: STEREOGRAPHIC PROJECT SYSTEM 1970
REFERENCE SYSTEM FOR QUOTES "0" BLACK SEA 1975

PROIECT FINANTAT DE UNIUNEA EUROPEANA
EUROPEAN UNION FINANCED PROJECT

GUVERNUL ROMANIEI
GOVERNMENT OF ROMANIA

BENEFICIAR: COMPANIA NATIONALA DE CAI FERATE "C.F.R." S.A.
ROMANIAN RAILWAY NATIONAL COMPANY

PROIECTANT/DESIGNER: ASOCIERE/JOINT VENTURE: 140/24.07/2015; 140/20534/2004
SUBCONTRACTANT/SUBCONTRACTOR: S.C. VIZITOP SRL; 3/40/4957/1999

DENUMIRE PROIECT/ DENUMIRE LUCRARE: "MODERNIZAREA LINIEI CF BUCURESTI NORD-JILAVA-GIURGIU NORD-GIURGIU FRONTIERA"
Lot 2 - MODERNIZAREA INFRASTRUCTURII DE CALE FERATA INTRE STATIILE CF BUCURESTI NORD-GIURGIU FRONTIERA
"MODERNIZATION OF THE RAILWAY LINE BUCHAREST NORTH - JILAVA - GIURGIU NORTH - GIURGIU BORDER"
LOT 2 - MODERNIZATION OF RAILWAY INFRASTRUCTURE BETWEEN RAILWAY STATIONS BUCHAREST NORTH-GIURGIU NORTH BORDER

PROJECT TITLE/ WORKS TITLE: STUDIU TOPOGRAFIC / TOPOGRAPHICAL STUDY

DENUMIRE PLAN/ DRAWING TITLE: PLAN DE SITUATIE/ LAYOUT PLAN
INTERVAL CF GIURGIU NORD-GIURGIU FRONTIERA/ GIURGIU NORD-GIURGIU FRONTIERA SECTION

NUME/NAME	SEMNATURA/SIGNATURE
PROIECTANT: Ing. R. BURCEA	
EXPERT: Ing. GUNGUREANU	
Ing. GUNGUREANU	

DATA/DATE: 01.2018
SCARA/SCALE: 1:1000
EXEMPLAR NR.: 1
COD PLAN/CODIFICATION SYSTEM: ST 207 Lot 2 35 ST 54 00