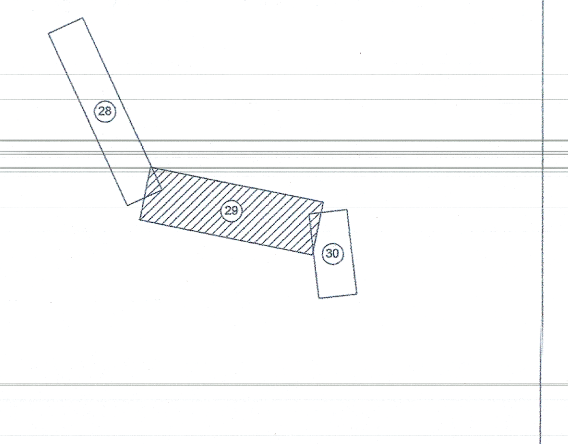

## LEGENDA/LEGEND

| Simbol | Descriere | Simbol | Descriere |
|---|---|---|---|
| B1 / 95.218 | BORNA RETEA DE INDESIRE/ BENCHMARK OF THE SECONDARY NETWORK | 78.658 | PUNCT RADIAT/ RADIATED POINT |
| 501 / 95.218 | REPER DE NIVELMENT DE BAZA/ REFERENCE BASE LEVEL | 67+251.00 | PICHET/ STAKE |
| 501 / 95.218 | REPER DE NIVELMENT TEHNIC/ REFERENCE TECHNICAL LEVEL | NR 7/8 TIP49 1:9 | |
| km 3 / 3,5 | BORNA KILOMETRICA-HECTOMETRICA/ KILOMETRIC-HECTOMETRIC BENCHMARK | NR 6 TIP49 1:9 | SCHIMBATORE DE CALE/ SWITCH |
| Bz | BORNA ZONA CF/ BENCHMARK OF THE RAILWAY AREA | NR 6 TIP49 1:9 | |
| K | BORNA CABLU/ CABLE BENCHMARK | | STALP DIN LEMN/ WOOD POLE |
| Fo | BORNA FIBRA OPTICA/ OPTICAL FIBER BENCHMARK | | STALP DIN BETON/ CONCRETE POLE |
| MF | MUFA CABLU/ CABLE BOX | | STALP DIN METAL/ METAL POLE |
| | CUTIE CABLU/ CABLE BOX | | LAMPADAR PE ALEI/ LAMPADAR ON SIDE STRET |
| C.cv. | COLOANA CONVORBIRE/ CONVERSATION COLUMN | | STALP INALTA TENSIUNE/ POWER-LINE TOWER |
| | MARCA DE SIGURANTA/ SAFETY MARK | SE 120 | STALP ELECTRIC DIN BETON/ CONCRETE ELECTRIC POLE |
| | SEMNAL LUMINOS PE STALP/ LIGHT SIGNAL ON POLE | SE 120 | STALP ELECTRIC DIN METAL/ METALLIC ELECTRIC POLE |
| | SEMNAL LUMINOS PITIC/ SMALL TRAFFIC LIGHTER | | STALP DIFUZOR/ LOUD-SPEAKER POLE |
| | AVERTIZOR PENTRU TRECERE LA NIVEL/ WARNING DEVICE FOR LEVEL CROSSING | | SUSTINERE LINIE DE CONTACT/ CONTACT WIRE |
| | BARIERA/ RAILWAY GATE | | ANCORA SUSTINERE STALP/ POLE ANCHOR |
| | CRUCE/ CROSS | | LIMITA ZONA CFR INTABULATA/ LIMITED CFR AREA INCLUDED |
| | CUTIE DIN FONTA GAZE/ GAS FONT BOX | | LIMITA UAT/ UAT LIMIT |
| | CAMIN DE VIZITARE TELEFON/ PHONE MANHOLE | | SUPRAFATA NECESARA PROIECTULUI/ NECESSARY PROJECT SURFACE |
| | CAMIN DE VIZITARE CANAL/ SEWERAGE MANHOLE | | CADSTRE VECINE/ NEIGHBORHOOD |
| | GURA DE AERISIRE CANALIZARE/ MOUTH VENTING SEWAGE | | AX CF/ RAILWAY LINE AXE |
| | CAMIN DE VIZITARE APA/ WATER MANHOLE | | TALUZ SUS/ SOIL SLOPE UP |
| g | MARTOR GAZE/ GAS TELLTALE | | TALUZ JOS/ SOIL SLOPE DOWN |
| | PANOU ELECTRIC/ ELECTRIC PANEL | | SANT DE SCURGERE A APELOR SUS/ DRAIN DITCH UP |
| | HIDRANT/ HYDRANT | | SANT DE SCURGERE A APELOR JOS/ DRAIN DITCH DOWN |
| | GEIGER/ GEIGER | | GARD DIN BETON/ CONCRETE FENCE |
| | FANTANA/ FOUNTAIN | | GARD DIN LEMN/ WOOD FENCE |
| | CISMEA/ DRINKING FOUNTAIN | | GARD DIN METAL/ METAL FENCE |
| | POM/ TREE | | GARD DIN PLASA/ CHAIN-LINK FENCE |
| | STALP POARTA/ GATE POLE | | GARD DIN SARMA/ BARBED WIRE FENCE |
| | OPRITOR CF/ CATCHER OF RAILWAY LINE | | GARD VIU-LIMITA PADURE/ GREEN FENCE-FOREST LIMIT |
| JIL | JOANTA IZOLATA DE LEGATURA/ INSULATING JOINT | | ZID SUS/ UP WALL |
| 49/65 | SCHIMBARE TIP SINA DE CALE FERATA/ RAIL TYPE CHANGE | | ZID JOS/ DOWN WALL |
| trav beton/lemn | SCHIMBARE TIP DE TRAVERSE/ SLEEPER TYPE CHANGE | | RIGOLA/ CREVICE |
| CED | DULAP CENTRALIZARE ELECTRODINAMICA/ SWITCH ELECTRODINAMIC CENTRALIZATION | | RAU/ RIVER |
| | TRANSFORMATOR ELECTRIC PE STALP/ POLE ELECTRICAL TRANSFORMER | | |
| | INDICATOR/ ROAD SIGN | | |

CERTIFICAT DE AUTORIZARE Seria RO-B-J Nr. 0684 S.C. VIO - TOP S.R.L. - CLASA II - Persoana juridică autorizată de ANCPI să execute lucrări de cadastru, geodezie, cartografie

CERTIFICAT DE AUTORIZARE Seria RO-B-F, Nr. 1650 Maria Gina UNGUREANU - Persoana fizică autorizată de ANCPI să execute lucrări de cadastru, geodezie şi cartografie

**NOTA: SISTEM DE PROIECTIE STEREOGRAFIC 1970**
**SISTEM DE REFERINŢĂ PENTRU COTE "0" MAREA NEAGRĂ 1975**

**NOTE: STEREOGRAPHIC PROJECT SYSTEM 1970**
**REFERENCE SYSTEM FOR QUOTES "0" BLACK SEA 1975**

CENTRUL NAŢIONAL DE CARTOGRAFIE
Prezentul document este inşotit de procesul-verbal de recepţie nr. 3 din data 30.03.2018
Margareta DOGARU - Coordonator comisie recepţie C.N.C.

| | | | |
|---|---|---|---|
| UNIUNEA EUROPEANĂ | PROIECT FINANŢAT DE UNIUNEA EUROPEANĂ / EUROPEAN UNION FINANCED PROJECT | GUVERNUL ROMÂNIEI / GOVERNMENT OF ROMANIA | Instrumente Structurale 2014-2020 |
| BENEFICIAR/ BENEFICIARY: | COMPANIA NAŢIONALĂ DE CĂI FERATE "C.F.R." S.A. / ROMANIAN RAILWAY NATIONAL COMPANY | | |
| PROIECTANT/ DESIGNER: ASOCIEREA/ JOINT VENTURE: J40/9877/2001 & acciona J40/20534/2004; SUBCONTRACTANT/ SUBCONTRACTOR: S.C. VIOTOP SRL J/40/4967/1999 | DENUMIRE PROIECT/ DENUMIRE LUCRARE: / PROJECT TITLE/ WORKS TITLE: | "MODERNIZAREA LINIEI CF BUCUREŞTI NORD-JILAVA-GIURGIU NORD-GIURGIU NORD FRONTIERĂ" *Lot 2 - MODERNIZAREA INFRASTRUCTURII DE CALE FERATA DINTRE STATIILE CF BUCURESTI NORD - GIURGIU NORD - GIURGIU FRONTIERA* "MODERNIZATION OF THE RAILWAY LINE BUCHAREST NORTH JILAVA - GIURGIU NORTH - GIURGIU NORTH BORDER" *LOT 2 - MODERNIZATION OF RAILWAY INFRASTRUCTURE BETWEEN RAILWAY STATIONS BUCHAREST NORD-GIURGIU NORTH-GIURGIU BORDER* | |

| | NUME/NAME | SEMNATURA/ SIGNATURE | SPECIALITATE/ SPECIALITY | STUDIU TOPOGRAFIC / TOPOGRAPHICAL STUDY |
|---|---|---|---|---|
| PROIECTANT/ DESIGNER | ing. R. BURCEA | | DENUMIRE PLAN/ DRAWING TITLE | PLAN DE SITUATIE/ LAYOUT PLAN STATIA CF COMANA/ COMANA RAILWEY STATION |
| EXPERT CHEIE/ KEY EXPERT | ing. G.UNGUREANU | | | |
| MP/PM | ing. G.UNGUREANU | | | |
| DATA/DATE: 01.2018 | | SCARA/SCALE: 1:1000 | EXEMPLAR NR./ EXEMPLARY NO. 1 | COD PLAN/CODIFICATION SYSTEM: ST 207 Lot 2 18 ST 29 00 |