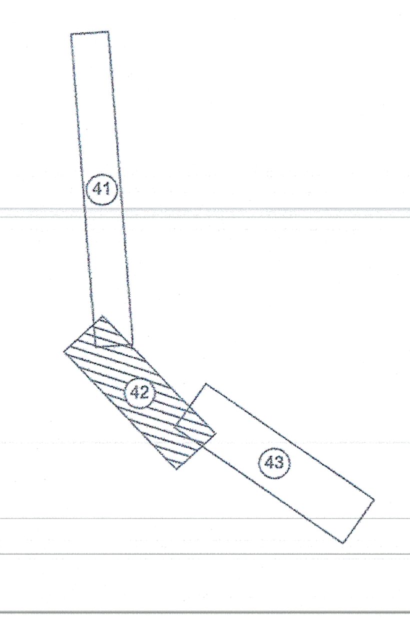

LEGENDA/LEGEND

BORNA RETEA DE INDESIRE/ BENCHMARK OF THE SECONDARY NETWORK
REPER DE NIVELMENT DE BAZA/ REFERENCE BASE LEVEL
REPER DE NIVELMENT TEHNIC/ REFERENCE TECHNICAL LEVEL
BORNA KILOMETRICA-HECTOMETRICA/ KILOMETRIC-HECTOMETRIC BENCHMARK
BORNA ZONA CF/ BENCHMARK OF THE RAILWAY AREA
BORNA CABLU/ CABLE BENCHMARK
BORNA FIBRA OPTICA/ OPTICAL FIBER BENCHMARK
MUFA CABLU/ CABLE BOX
CUTIE CABLU/ CABLE BOX
COLOANA CONVORBIRE/ CONVERSATION COLUMN
MARCA DE SIGURANTA/ SAFETY MARK
SEMNAL LUMINOS PE STALP/ LIGHT SIGNAL ON POLE
SEMNAL LUMINOS PITIC/ SMALL TRAFFIC LIGHTER
AVERTIZOR PENTRU TRECERE LA NIVEL/ WARNING DEVICE FOR LEVEL CROSSING
BARIERA/ RAILWAY GATE
CRUCE/ CROSS
CUTIE DIN FONTA GAZE/ GAS FONT BOX
CAMIN DE VIZITARE TELEFON/ PHONE MANHOLE
CAMIN DE VIZITARE CANAL/ SEWERAGE MANHOLE
GURA DE AERISIRE CANALIZARE/ MOUTH VENTING SEWAGE
CAMIN DE VIZITARE APA/ WATER MANHOLE
MARTOR GAZE/ GAS TELLTALE
PANOU ELECTRIC/ ELECTRIC PANEL
HIDRANT/ HYDRANT
GEIGER/ GEIGER
FANTANA/ FOUNTAIN
CISMEA/ DRINKING FOUNTAIN
POM/ TREE
STALP POARTA/ GATE POLE
OPRITOR CF/ CATCHER OF RAILWAY LINE
JOANTA IZOLATA DE LEGATURA/ INSULATING JOINT
SCHIMBARE TIP SINA DE CALE FERATA/ RAIL TYPE CHANGE
SCHIMBARE TIP DE TRAVERSE/ SLEEPER TYPE CHANGE
DULAP CENTRALIZARE ELECTRODINAMICA/ SWITCH ELECTRODINAMIC CENTRALIZATION
TRANSFORMATOR ELECTRIC PE STALP/ POLE ELECTRICAL TRANSFORMER
INDICATOR/ ROAD SIGN

PUNCT RADIAT/ RADIATED POINT
PICHET/ STAKE
SCHIMBATORE DE CALE/ SWITCH
STALP DIN LEMN/ WOOD POLE
STALP DIN BETON/ CONCRETE POLE
STALP DIN METAL/ METAL POLE
LAMPADAR PE ALEI/ LAMPADAR ON SIDE STRET
STALP INALTA TENSIUNE/ POWER-LINE TOWER
STALP ELECTRIC DIN BETON/ CONCRETE ELECTRIC POLE
STALP ELECTRIC DIN METAL/ METALLIC ELECTRIC POLE
STALP DIFUZOR/ LOUD-SPEAKER POLE
SUSTINERE LINIE DE CONTACT/ CONTACT WIRE
ANCORA SUSTINERE STALP/ POLE ANCHOR
LIMITA ZONA CFR INTABULATA/ LIMITED CFR AREA INCLUDED
LIMITA UAT/ UAT LIMIT
SUPRAFATA NECESARA PROIECTULUI/ NECESSARY PROJECT SURFACE
CADSTRE VECINE/ NEIGHBORHOOD
AX CF/ RAILWAY LINE AXE
TALUZ SUS/ SOIL SLOPE UP
TALUZ JOS/ SOIL SLOPE DOWN
SANT DE SCURGERE A APELOR SUS/ DRAIN DITCH UP
SANT DE SCURGERE A APELOR JOS/ DRAIN DITCH DOWN
GARD DIN BETON/ CONCRETE FENCE
GARD DIN LEMN/ WOOD FENCE
GARD DIN METAL/ METAL FENCE
GARD DIN PLASA/ CHAIN-LINK FENCE
GARD DIN SARMA/ BARBED WIRE FENCE
GARD VIU-LIMITA PADURE/ GREEN FENCE-FOREST LIMIT
ZID SUS/ UP WALL
ZID JOS/ DOWN WALL
RIGOLA/ CREVICE
RAU/ RIVER

NOTA: SISTEM DE PROIECTIE STEREOGRAFIC 1970
SISTEM DE REFERINTĂ PENTRU COTE "0" MAREA NEAGRĂ 1975

NOTE: STEREOGRAPHIC PROJECT SYSTEM 1970
REFERENCE SYSTEM FOR QUOTES "0" BLACK SEA 1975

CERTIFICAT DE AUTORIZARE Seria RO-B-F Nr. 1650 Maria Gina UNGUREANU

CERTIFICAT DE AUTORIZARE Seria RO-B-J Nr. 0684 S.C. VIO - TOP S.R.L.

CENTRUL NATIONAL DE CARTOGRAFIE — Prezentul document este insotit de procesul-verbal de receptie

PROIECT FINANȚAT DE UNIUNEA EUROPEANĂ / EUROPEAN UNION FINANCED PROJECT		GUVERNUL ROMÂNIEI / GOVERNMENT OF ROMANIA	
BENEFICIAR/ BENEFICIARY:		COMPANIA NAȚIONALĂ DE CĂI FERATE "C.F.R." S.A. / ROMANIAN RAILWAY NATIONAL COMPANY	
PROIECTANT/ DESIGNER: ASOCIEREA/ JOINT VENTURE: J40/9877/2001 & J40/20534/2004 SUBCONTRACTANT/ SUBCONTRACTOR: S.C. VIOTOP SRL J/40/4967/1999		DENUMIRE PROIECT/ DENUMIRE LUCRARE: PROJECT TITLE/ WORKS TITLE:	"MODERNIZAREA LINIEI CF BUCUREȘTI NORD-JILAVA-GIURGIU NORD-GIURGIU NORD FRONTIERĂ" Lot 2 - MODERNIZAREA INFRASTRUCTURII DE CALE FERATA DINTRE STATIILE CF BUCURESTI NORD - GIURGIU NORD - GIURGIU FRONTIERA "MODERNIZATION OF THE RAILWAY LINE BUCHAREST NORTH - JILAVA - GIURGIU NORTH - GIURGIU NORTH BORDER" LOT 2 - MODERNIZATION OF RAILWAY INFRASTRUCTURE BETWEEN RAILWAY STATIONS BUCHAREST NORD-GIURGIU NORTH-GIURGIU BORDER
NUME/NAME	SEMNATURA/ SIGNATURE	SPECIALITATE/ SPECIALITY	STUDIU TOPOGRAFIC / TOPOGRAPHICAL STUDY
PROIECTANT/ DESIGNER: Ing. R. BURCEA		DENUMIRE PLAN/ DRAWING TITLE	PLAN DE SITUATIE/LAYOUT PLAN HALTA TABANU/TABANU HALT
EXPERT CHEIE/ KEY EXPERT: Ing. G.UNGUREANU			
MP/PM: Ing. G.UNGUREANU			
DATA/DATE: 01.2018	SCARA/SCALE: 1:1000	EXEMPLAR NR./ EXEMPLARY NO. 1	COD PLAN/CODIFICATION SYSTEM: ST 207 Lot 2 26 ST 42 00