Statia / Station BERCENI
Situatia existenta / Existing situation
Vex.=30 km/h

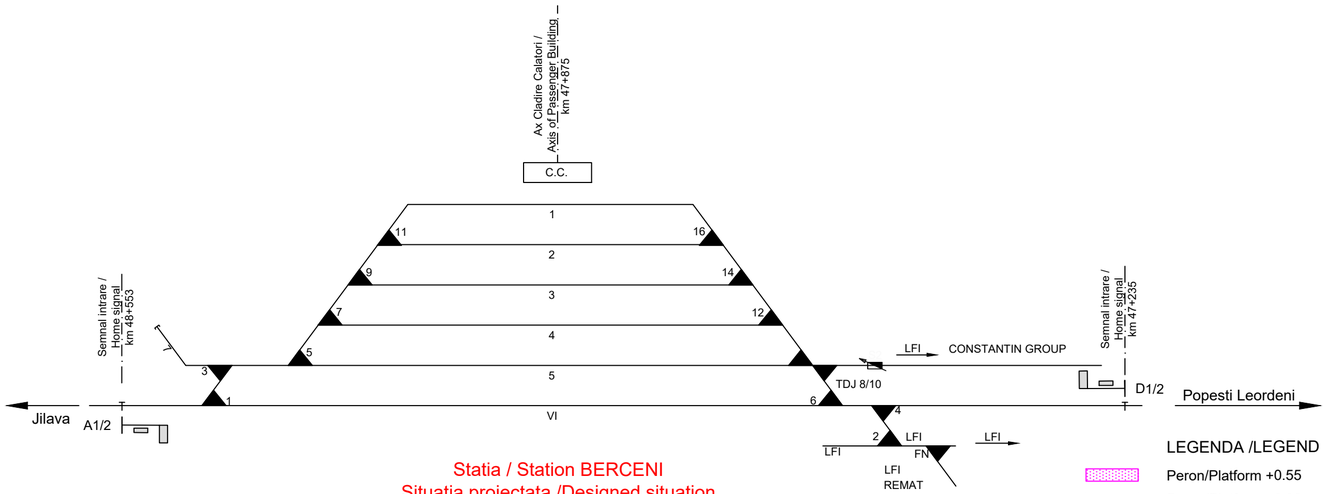

Statia / Station BERCENI
Situatia proiectata /Designed situation
Vpr.=120 km/h

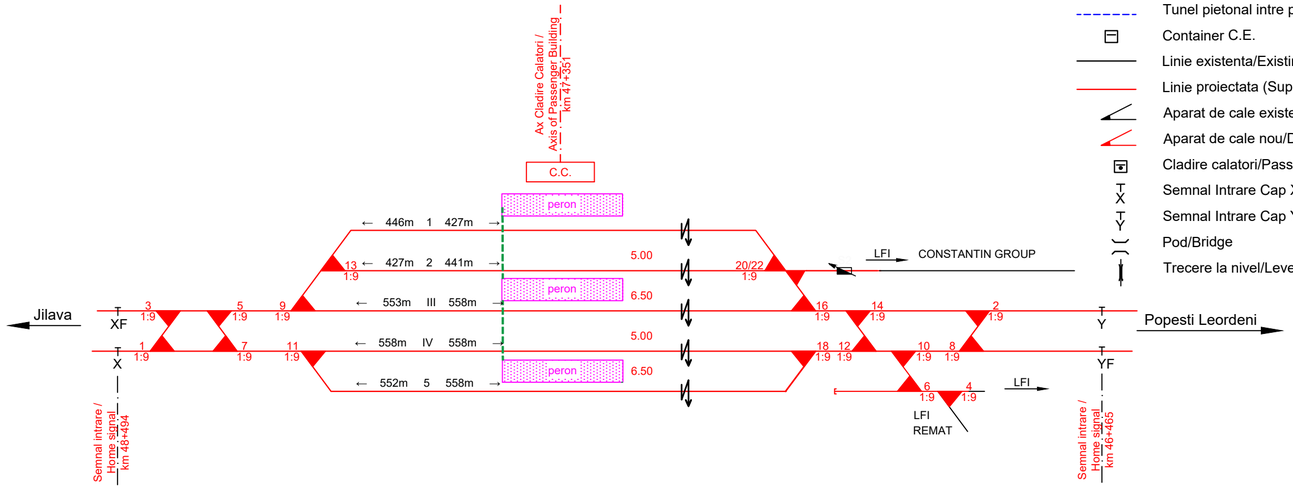

LEGENDA /LEGEND

- Peron/Platform +0.55
- Peron/Platform +0.38
- Platforma/Platform +0.00
- Parcare/Parking
- Trecere la nivel pietonala/Pedestrian level crossing
- Tunel pietonal intre peroane/Pedestrian tunnel between the platforms
- Container C.E.
- Linie existenta/Existing line
- Linie proiectata (Suprastructura noua)/Designed line (New superstructure)
- Aparat de cale existent/ Existing switch
- Aparat de cale nou/Designed switch
- Cladire calatori/Passenger Building
- Semnal Intrare Cap X/Home signal X
- Semnal Intrare Cap Y/Home signal Y
- Pod/Bridge
- Trecere la nivel/Level crossing

ENTITATE CONTRACTANTA
CONTRACTING ENTITY
C.N.C.F. "C.F.R." - S.A.

CONTRACTANT
CONTRACTOR
Asocierea S.C. ISPCF S.A. - S.C. BAICONS IMPEX SRL

	Nume *Name*	Data *Date*	Semnatura *Signature*
Șef Proiect *Project Manager*	Viorel Gorgonetu	11.2024	
Verificat *Checked*	Ioana Crăciun	11.2024	
Proiectat *Designed*	Alexandra Buturugă	11.2024	

”Modernizarea liniilor și instalațiilor din Complexul Feroviar București”
Studiu de fezabilitate

”Modernization lines and installations in the Bucharest Railway Complex
Feasibility Study

Proiect / *Project*
38 / 2022

Faza / *Phase*
S.F.
F.S.

Denumire / *Title*

SCHITA STATIA BERCENI
SKETCH BERCENI STATION

Scara / *Scale*

Codificare / Codification System

C O B U | S F | C F S | S C H | 1 8 | 0 0 | 0 0 1 | R 0 0

Istoricul reviziilor / Revision History

Rev.	Data/Date	Descriere Modificare / Modification description
1		
2		
3		
4		