STRUCTURA COPERTINA TIP 2 / *TYPE 2 CANOPY STRUCTURE*

ELEVATIE / *ELEVATION 1 - 1*

Scara/*Scale* 1:100

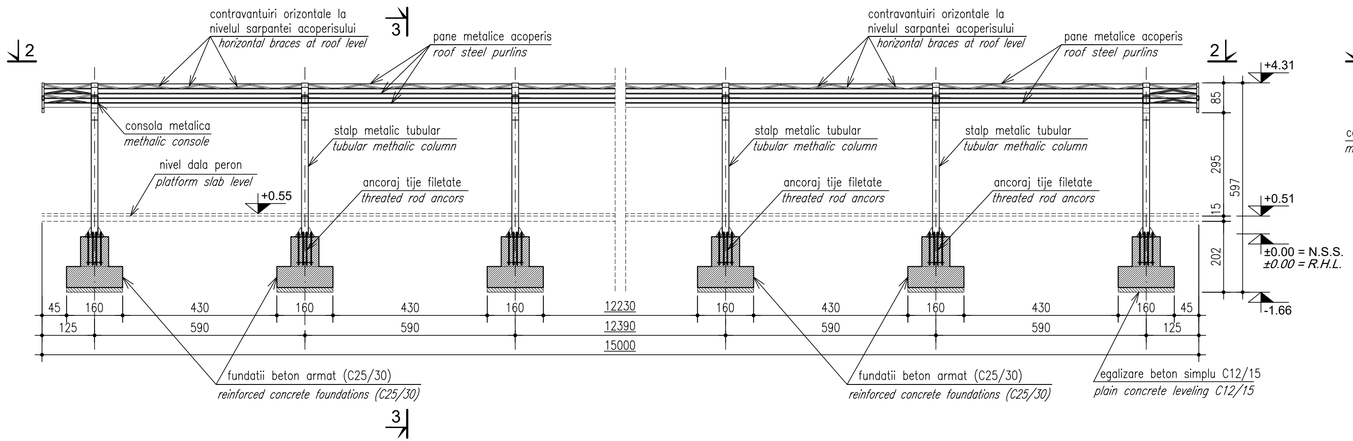

SECTIUNE TRANSVERSALA / *CROSS SECTION 3 - 3*

Scara/*Scale* 1:100

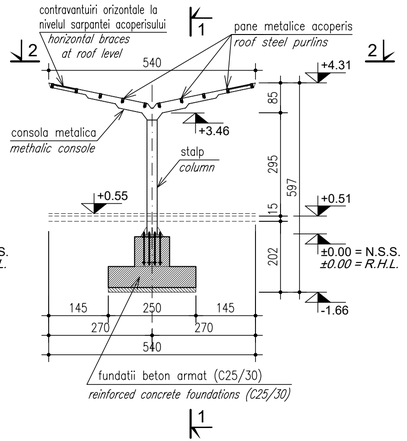

PLAN ACOPERIS / *ROOF PLAN 2 - 2*

Scara/*Scale* 1:100

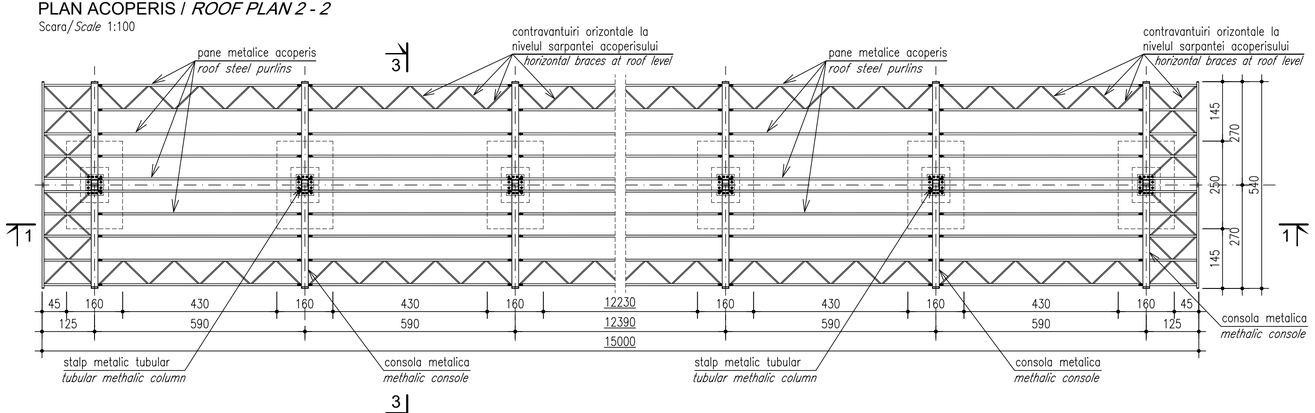

ENTITATE CONTRACTANTA
CONTRACTING ENTITY

C.N.C.F. "C.F.R." - S.A.

CONTRACTANT
CONTRACTOR

Asocierea S.C. ISPCF S.A. - S.C. BAICONS IMPEX SRL

	Nume *Name*	Data *Date*	Semnatura *Signature*
Şef Proiect *Project Manager*	ing. Viorel GORGONETU	11.2024	
Verificat *Checked*	ing. Dan PĂTRAŞCU	11.2024	
Proiectat *Designed*	ing. Gabi-Marian MANEA	11.2024	

"Modernizarea liniilor şi instalaţiilor din Complexul Feroviar Bucureşti"
Studiu de fezabilitate

"Modernization lines and installations in the Bucharest Railway Complex
Feasibility Study

Proiect / *Project*: 38 / 2022

Faza / *Phase*: S.F. / *F.S.*

Denumire / Title

PLAN TIP / *TYPE PLAN*
Structura copertina tip 2 / Type 2 canopy structure
Elevatie. Plan. Sectiune transversala. Elevation. Plan. Cross section.

Scara / *Scale*: 1:100

Codificare / Codification System

C O B U | S F | R E Z | D P T | 0 0 | 0 7 | 0 0 4 | R 0 0

Istoricul reviziilor / Revision History

Rev.	Data/Date	Descriere Modificare / Modification description
1		
2		
3		
4		