# STATIA C.F. VOLUNTARI / *VOLUNTARI RAILWAY STATION*

## PLAN (ZONA COPERTINE REFUGIU) / *PLAN (REFUGE CANOPYES AREAS)*

Scara/*Scale* 1:100

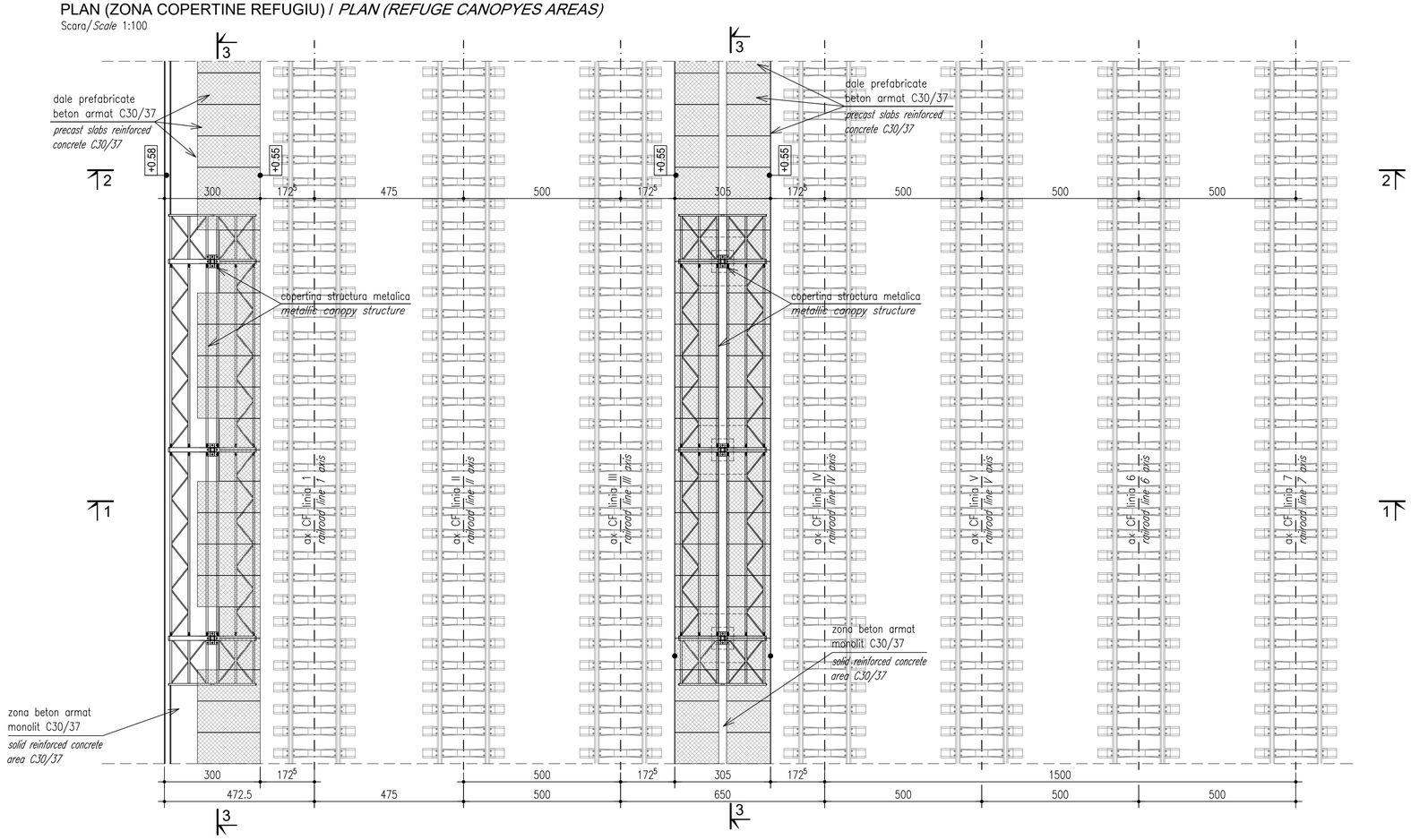


## SECTIUNE LONGITUDINALA ZONA COPERTINA REFUGIU (3 - 3) / *REFUGE CANOPYES AREAS LONGITUDINAL SECTION (3 - 3)*

Scara/*Scale* 1:100

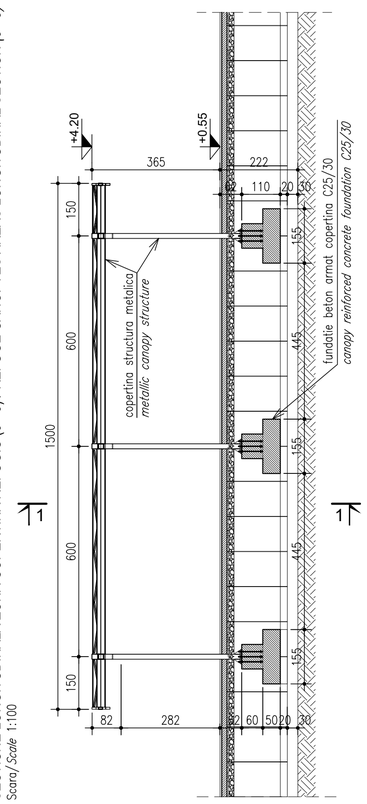


## VIGNETA / *VIGNETTE*

Scara/*Scale* 1:2000

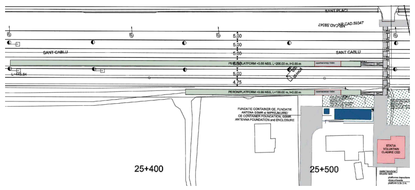


## SECTIUNE TRANSVERSALA PEROANE (ZONA COPERTINEI 1 - 1) / *PLATFORMS CROSS SECTION (CANOPY AREA 1 - 1)*

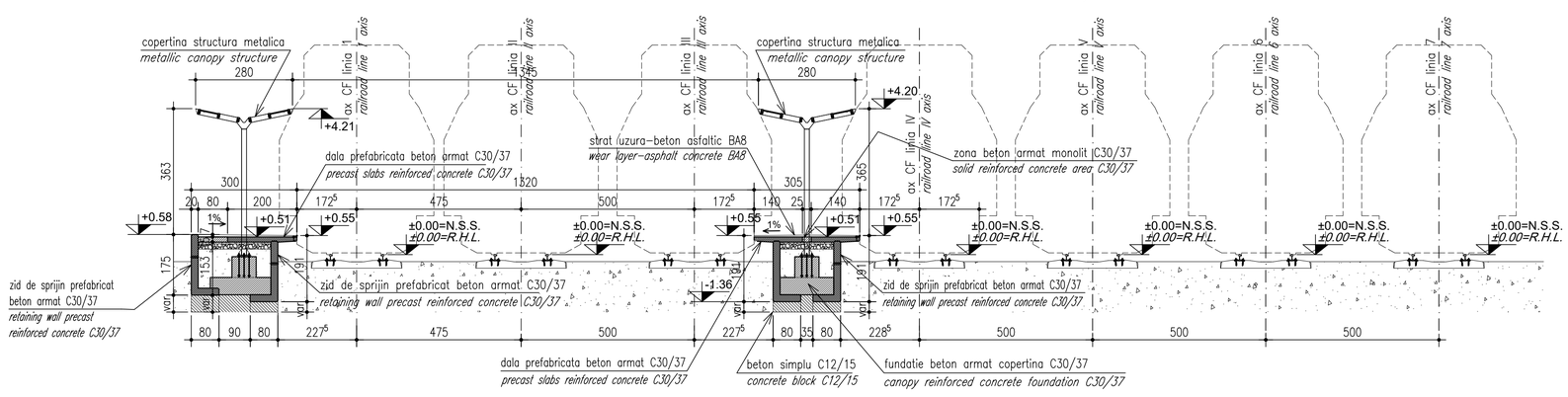


## SECTIUNE TRANSVERSALA PEROANE 2-2 / *PLATFORMS CROSS SECTION 2-2*

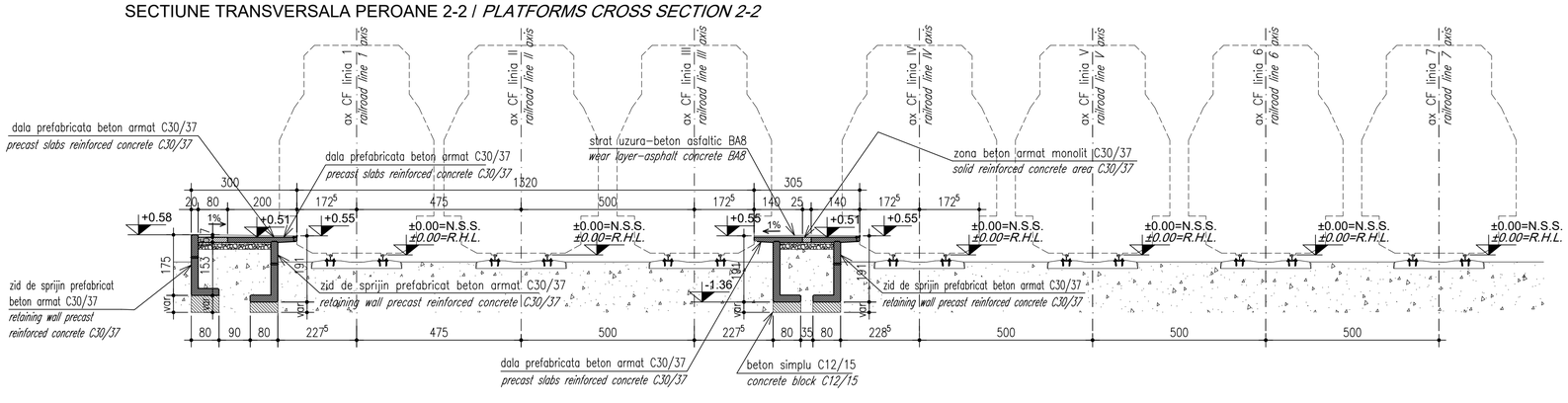


ENTITATE CONTRACTANTA
*CONTRACTING ENTITY*

**C.N.C.F. "C.F.R." - S.A.**

CONTRACTANT
*CONTRACTOR*

**Asocierea S.C. ISPCF S.A. - S.C. BAICONS IMPEX SRL**

| | Nume *Name* | Data *Date* | Semnatura *Signature* |
|---|---|---|---|
| Sef Proiect *Project Manager* | ing. Viorel GORGONETU | 11.2024 | |
| Verificat *Checked* | ing. Dan PĂTRAȘCU | 11.2024 | |
| Proiectat *Designed* | ing. Mihai PANĂ | 11.2024 | |

**"Modernizarea liniilor și instalațiilor din Complexul Feroviar București"**
**Studiu de fezabilitate**

***"Modernization lines and installations in the Bucharest Railway Complex***
***Feasibility Study***

Proiect / *Project*: 38 / 2022

Faza / *Phase*: S.F. / *F.S.*

*Denumire / Title*

**STATIA C.F. VOLUNTARI / VOLUNTARI *RAILWAY STATION***
**Plan (zona copertine refugiu). Sectiuni longitudinale si transversale caracteristice. / *Plan (refuges canopyes areas). Characteristic longitudinal and transverse sections.***

Scara / *Scale*: 1:100 / 1:2000

Codificare / Codification System

C O B U | S F | R E Z | D E V | 0 5 | 0 5 | 0 0 1 | R 0 0

Istoricul reviziilor / Revision History

| Rev. | Data/Date | Descriere Modificare / Modification description |
|---|---|---|
| 1 | | |
| 2 | | |
| 3 | | |
| 4 | | |