STATIA C.F. BASARAB / *BASARAB RAILWAY STATION*

PLAN (ZONA COPERTINE REFUGIU) / *PLAN (REFUGE CANOPYES AREAS)*

Scara/*Scale* 1:100

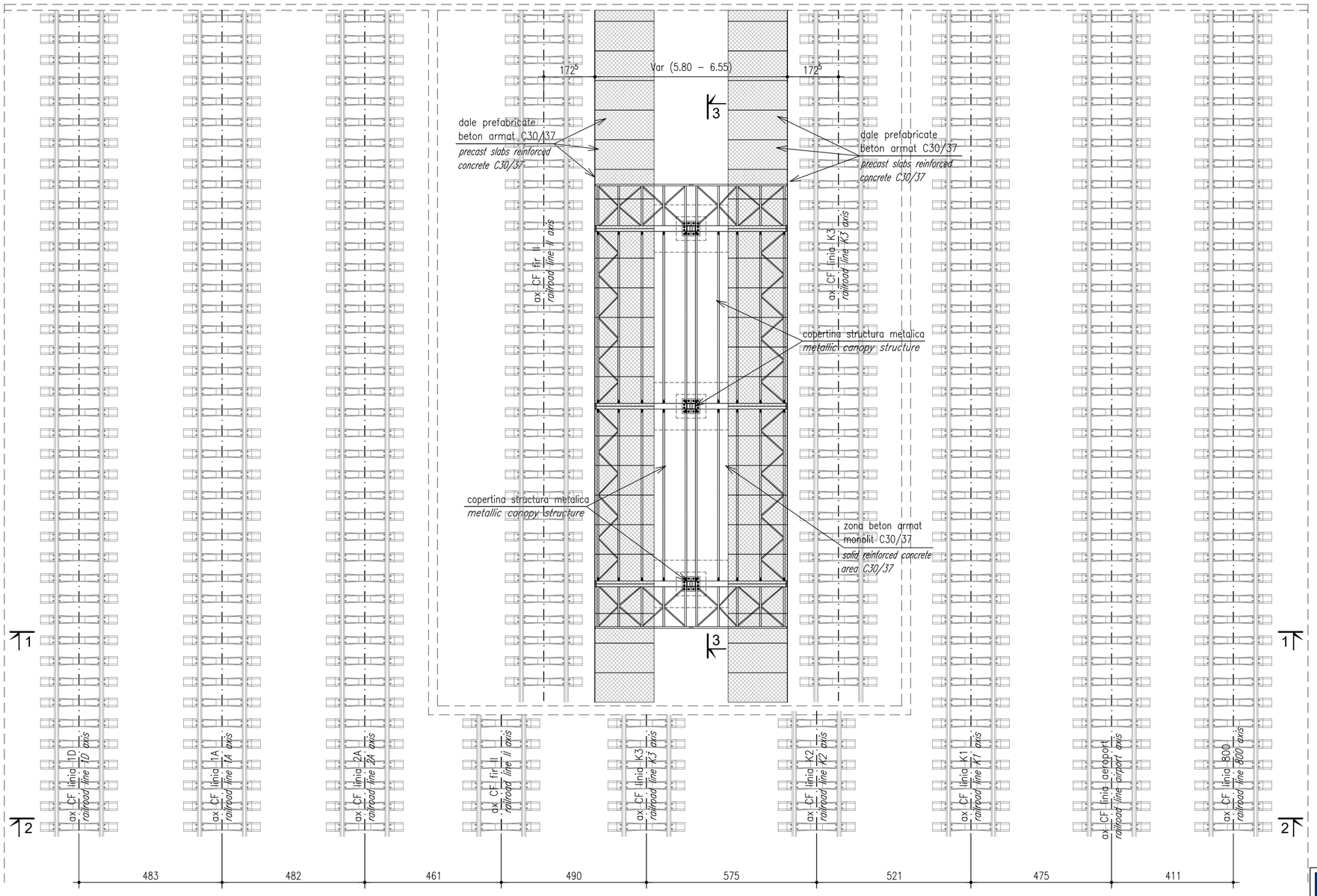

SECTIUNE LONGITUDINALA ZONA COPERTINA REFUGIU (3 - 3) / *REFUGE CANOPYES AREAS LONGITUDINAL SECTION (3 - 3)*

Scara/*Scale* 1:100

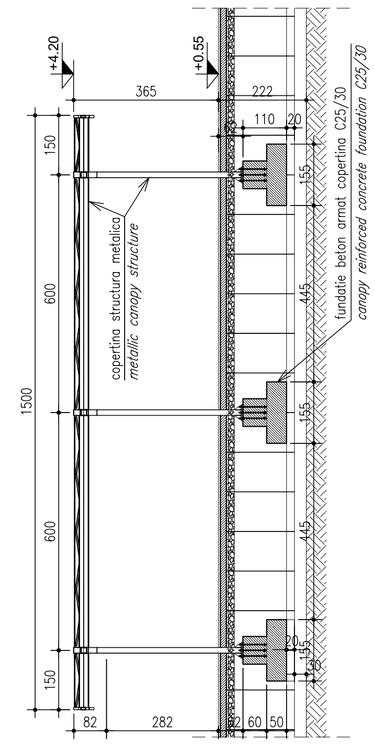

VIGNETA / *VIGNETTE*

Scara/*Scale* 1:2000

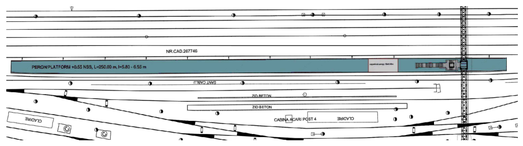

SECTIUNE TRANSVERSALA PEROANE (ZONA COPERTINEI 1 - 1) / *PLATFORMS CROSS SECTION (CANOPY AREA 1 - 1)*

Scara/*Scale* 1:100

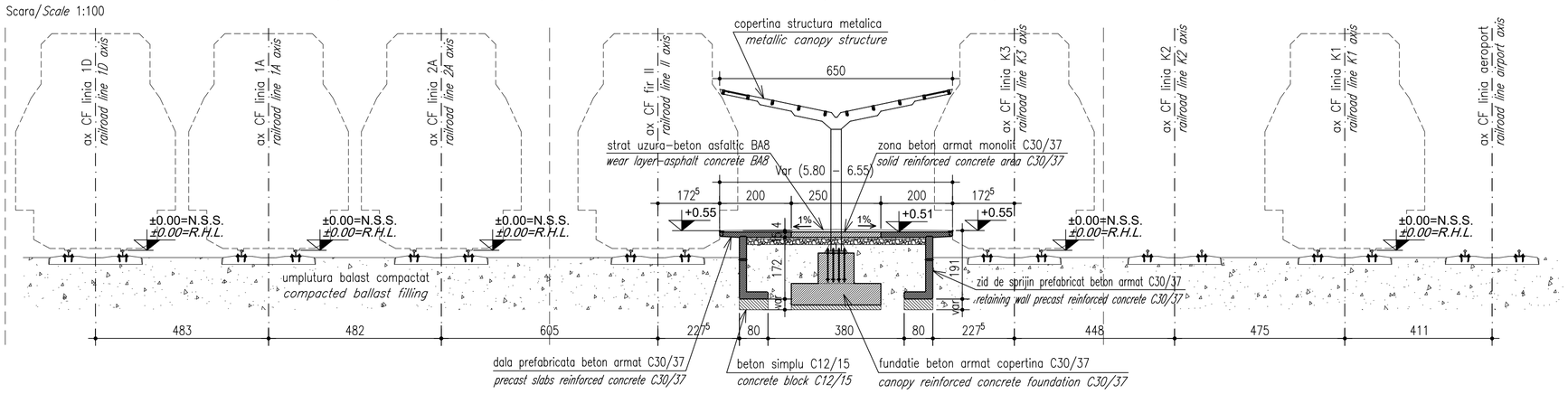

SECTIUNE TRANSVERSALA PEROANE 2-2 / *PLATFORMS CROSS SECTION 2-2*

Scara/*Scale* 1:100

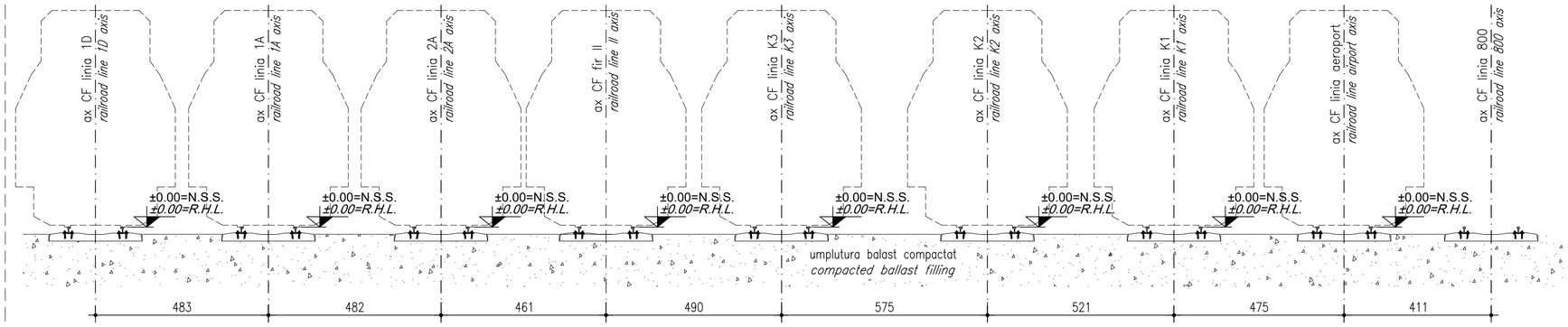

1:100

ENTITATE CONTRACTANTA
CONTRACTING ENTITY

C.N.C.F. "C.F.R." - S.A.

CONTRACTANT
CONTRACTOR

Asocierea S.C. ISPCF S.A. - S.C. BAICONS IMPEX SRL

	Nume *Name*	Data *Date*	Semnatura *Signature*
Şef Proiect *Project Manager*	ing. Viorel GORGONETU	11.2024	
Verificat *Checked*	ing. Dan PĂTRAŞCU	11.2024	
Proiectat *Designed*	ing. Mihai PANĂ	11.2024	

"Modernizarea liniilor și instalațiilor din Complexul Feroviar București"
Studiu de fezabilitate

"Modernization lines and installations in the Bucharest Railway Complex
Feasibility Study

Proiect / *Project*: 38 / 2022

Faza / *Phase*: S.F. / *F.S.*

Denumire / Title

STATIA C.F. BASARAB / *BASARAB RAILWAY STATION*
Plan (zona copertine refugiu). Sectiuni longitudinale si transversale caracteristice. / *Plan (refuges canopyes areas). Characteristic longitudinal and transverse sections.*

Scara / *Scale*: 1:100, 1:2000

Codificare / Codification System

C O B U	S F	R E Z	D E V	3 6	0 5	0 0 1	R 0 0

Istoricul revizuirilor / Revision History

Rev.	Data/Date	Descriere Modificare / Modification description
1		
2		
3		
4		