CANAL CABLURI TIP C1 (gabarit interior minim 0.60x0.60m). ALCATUIRE. DETALII.
CABLE CHANNEL TYPE C1 (minimum internal dimensions 0.60x0.60m). COMPOSITION. DETAILS.

CANAL CABLURI TIP C1 (gabarit interior minim 0.60x0.60m) - Sectiune curenta
CABLE CHANNEL TYPE C1 (minimal interior gauge 0.60x0.60m) - Current section

Scara/*Scale* 1:20

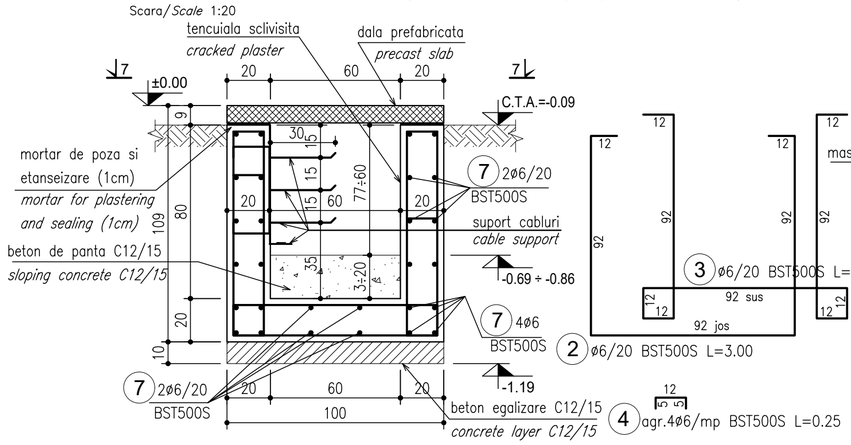

DETALIU (BITUMARE ROSTURI)
DETAIL (BITUMINOUS JOINTS)

Scara/*Scale* 1:20

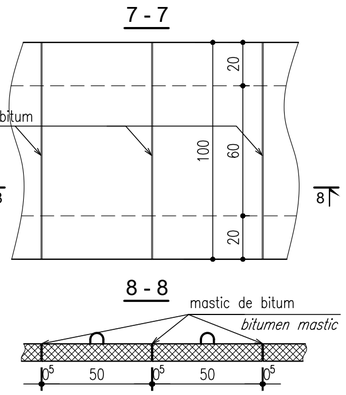

DALA PREFABRICATA D3 (la intersectii) /
PRECAST ELEMENT D3 (at intersections)

Scara/*Scale 1:20*

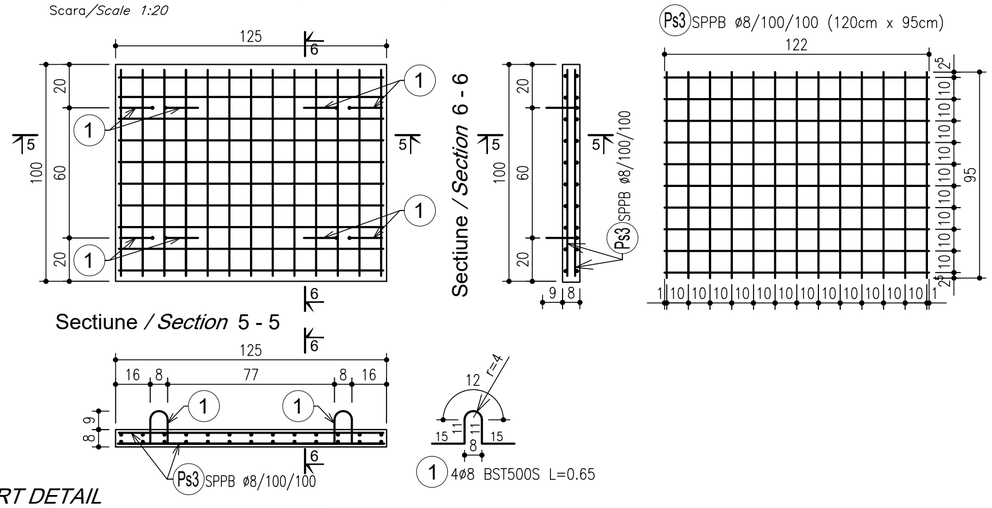

CANAL CABLURI - (la intersectii si la capete)

Scara 1:20

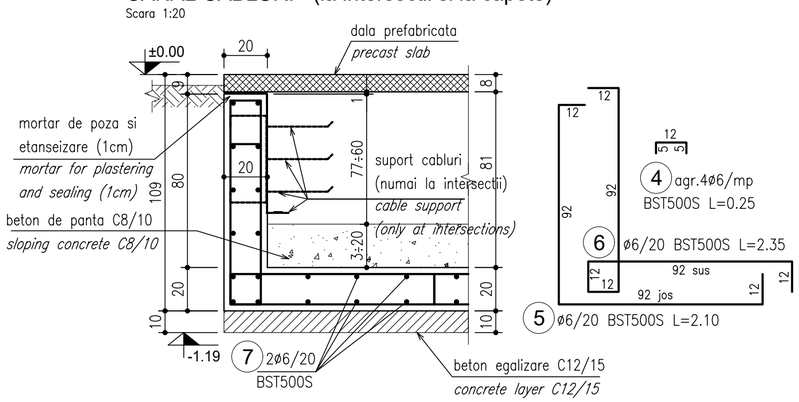

DETALIU SUPORT CABLURI / *CABLE SUPPORT DETAIL*

Scara/*Scale 1:10*

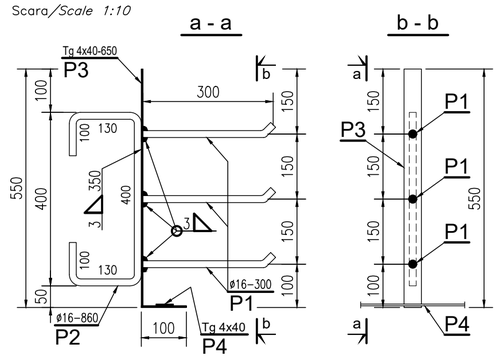

DALA PREFABRICATA D1 /
PRECAST ELEMENT D1

Scara/*Scale 1:20*

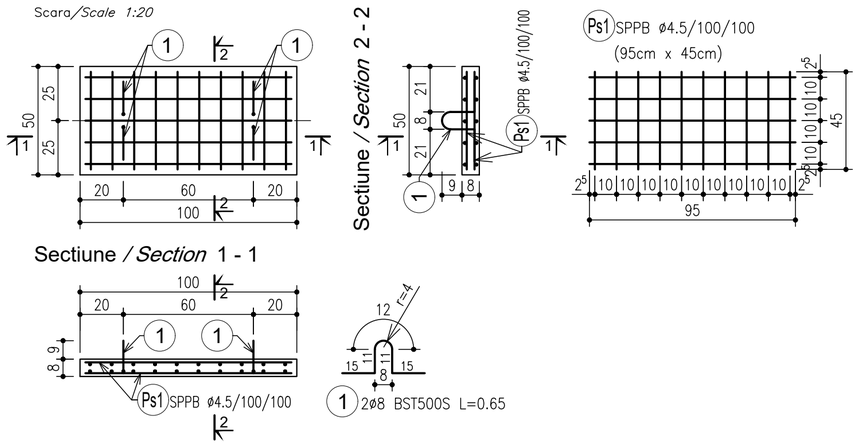

DALA PREFABRICATA D2 (carosabila) /
PRECAST ELEMENT D2 (carriageable)

Scara/*Scale 1:20*

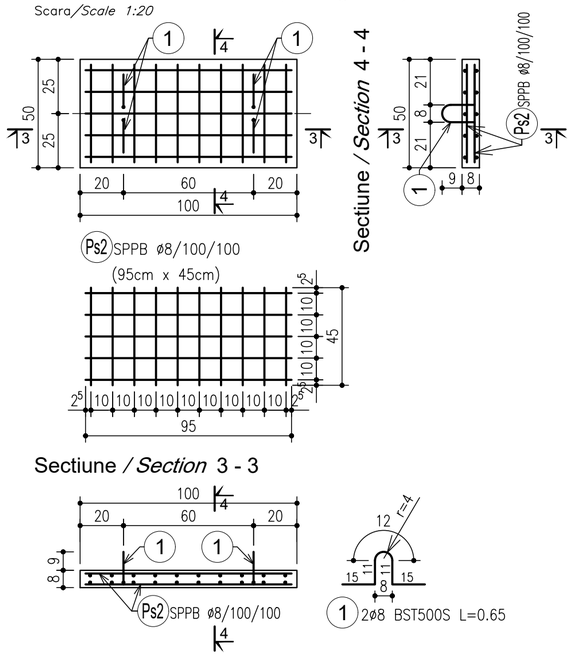

ENTITATE CONTRACTANTA
CONTRACTING ENTITY

C.N.C.F. "C.F.R." - S.A.

CONTRACTANT
CONTRACTOR

Asocierea S.C. ISPCF S.A. - S.C. BAICONS IMPEX SRL

	Nume *Name*	Data *Date*	Semnatura *Signature*
Şef Proiect *Project Manager*	ing. Viorel GORGONETU	11.2024	
Verificat *Checked*	ing. Dan PĂTRAŞCU	11.2024	
Proiectat *Designed*	ing. Franciska SEPRŐDI	11.2024	

"Modernizarea liniilor şi instalaţiilor din Complexul Feroviar Bucureşti"
Studiu de fezabilitate

"Modernization lines and installations in the Bucharest Railway Complex
Feasibility Study

Proiect / *Project* 38 / 2022

Faza / *Phase* S.F. *F.S.*

Denumire / Title

SUBSTATIE DE TRACTIUNE PASAREA.
CANAL CABLURI TIP C1 (0.60x0.60m). ALCATUIRE. DETALII. /
PASAREA TRACTION SUBSTATION.
CABLE CHANNEL TYPE C1 (0.60x0.60m). COMPOSITION. DETAILS.

Scara / *Scale* 1:20 1:10

Codificare / Codification System

COBU SF REZ DDT 08 12 004 R00

Istoricul reviziilor / Revision History

Rev.	Data/Date	Descriere Modificare / Modification description
1		
2		
3		
4		