CUVA TRANSFORMATOR 16MVA. ALCATUIRE. PLAN COFRAJ SI ARMARE. SECTIUNI.

TRANSFORMER TANK 16MVA. STRUCTURE. FORMWORK AND REINFORCEMENT PLAN. SECTIONS.

PLAN CUVA TRANSFORMATOR 16MVA / *TRANSFORMER TANK 16MVA PLAN*

Scara / *Scale* 1:50

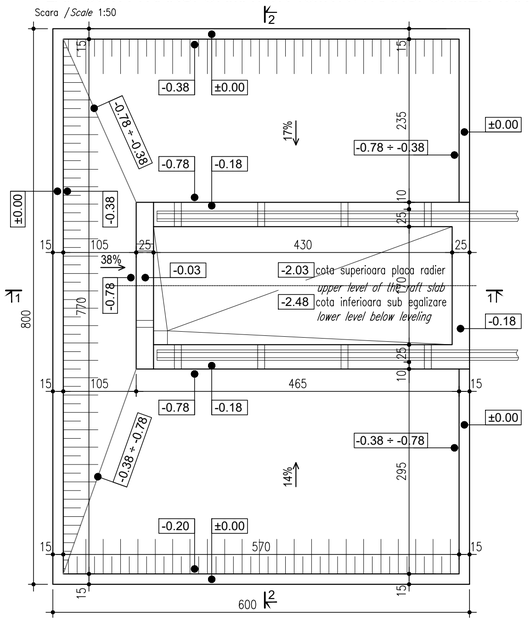

SECTIUNE TRANSVERSALA 2 - 2 (COFRAJ)

TRANSVERSAL SECTION 2 - 2 (FRAMEWORK)

Scara / *Scale* 1:50

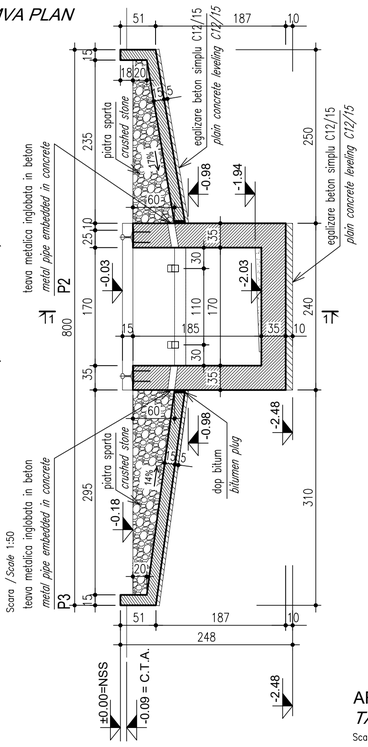

SECTIUNE TRANSVERSALA 2 - 2 (ARMARE)

TRANSVERSAL SECTION 2 - 2 (REINFORCEMENT)

Scara / *Scale* 1:50

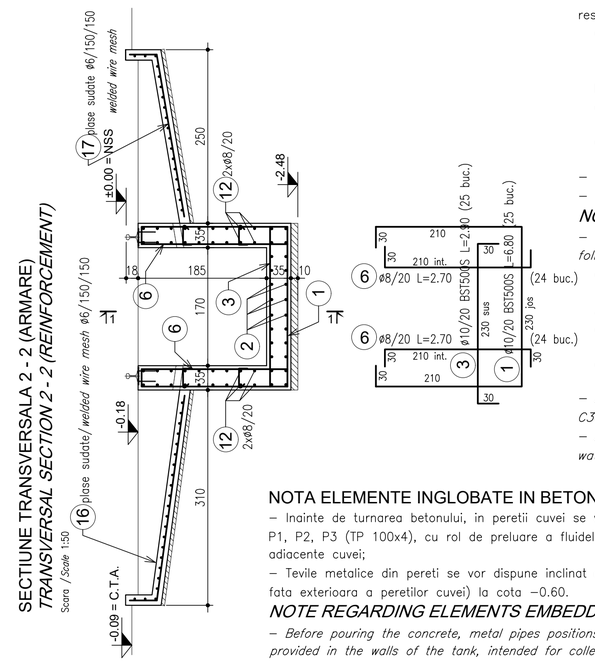

NOTE REALIZARE PLACI INCLINATE ADIACENTE CUVEI

– Plasele sudate Φ6/150/150 (marcile 16, 17, 18) din componenta placilor inclinate adiacente cuvei principale se vor monta respectand urmatoarele reguli:

a. dupa realizarea egalizarii din beton simplu, plasele se vor pozitiona cu ajutorul unor distantieri astfel incat sa se gaseasca in planul median al placilor inclinate ce urmeaza a fi realizate (la aproximativ 7cm de fata superioara a egalizarii);

b. acestea se vor imbina prin suprapunere (pe ambele directii) cel putin doua ochiuri de plasa;

c. pentru realizarea armarii rebordului de la marginile perimetrale exterioare ale placilor inclinate, plasele se vor indoi dupa cofraj pe o portiune de aproximativ 25cm;

d. pe zonele ruperilor de panta, plasele se vor decupa si indoi dupa cofraj respectand regula de suprapunere pe cel putin doua ochiuri.

– Dupa realizarea armarii, placile inclinate si rebordul perimetral (cu grosime de 15cm) se vor turna folosind beton C30/37;

– La frontiera dintre placile inclinate si cuva principala se va realiza un dop de bitum continuu (pentru obtinerea etanseitatii).

NOTES REGARDING THE CREATION OF ADJACENT INCLINED SLABS TO THE TANK

– The welded meshes Φ6/150/150 (grades 16, 17, 18) for the inclined slabs adjacent to the main tank will be installed following these rules:

a. After leveling with plain concrete, the meshes will be positioned using spacers so that they are located in the median plane of the inclined slabs to be constructed (approximately 7cm from the upper surface of the leveling);

b. They will be overlapped (in both directions) with at least two mesh eyes;

c. To reinforce the edge at the outer perimeter of the inclined slabs, the meshes will be bent after formwork over a length of approximately 25cm;

d. In the areas of slope breaks, the meshes will be cut and bent after formwork, following the rule of overlapping on at least two mesh eyes.

– After reinforcement, the inclined slabs and the perimeter edge (with a thickness of 15cm) will be poured using concrete C30/37;

– At the boundary between the inclined slabs and the main tank, a continuous bitumen plug will be applied (to ensure waterproofing).

SECTIUNE LONGITUDINALA 1 - 1 (COFRAJ)

LONGITUDINAL SECTION 1 - 1 (FRAMEWORK)

Scara / *Scale* 1:50

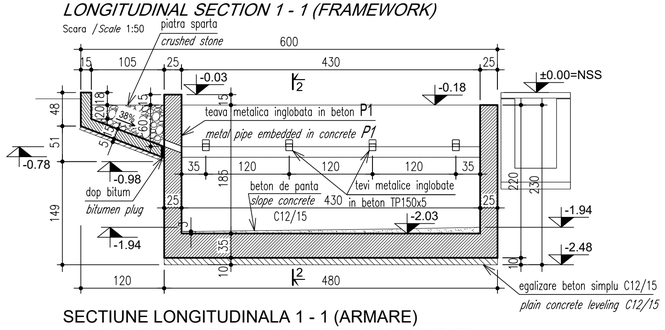

SECTIUNE LONGITUDINALA 1 - 1 (ARMARE)

LONGITUDINAL SECTION 1 - 1 (REINFORCEMENT)

Scara / *Scale* 1:50

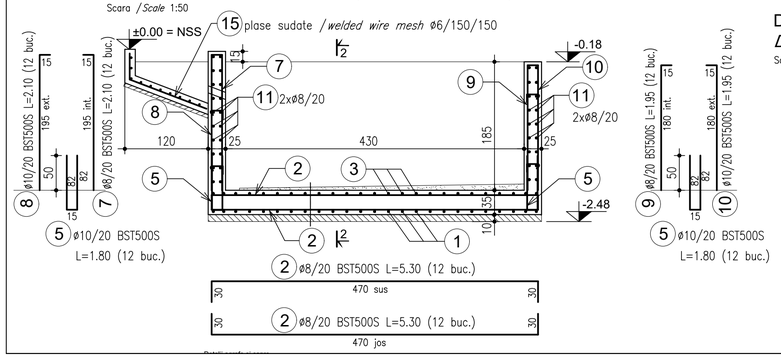

ARMARE PERETI CUVA

TANK WALL REINFORCEMENT

Scara / *Scale* 1:50

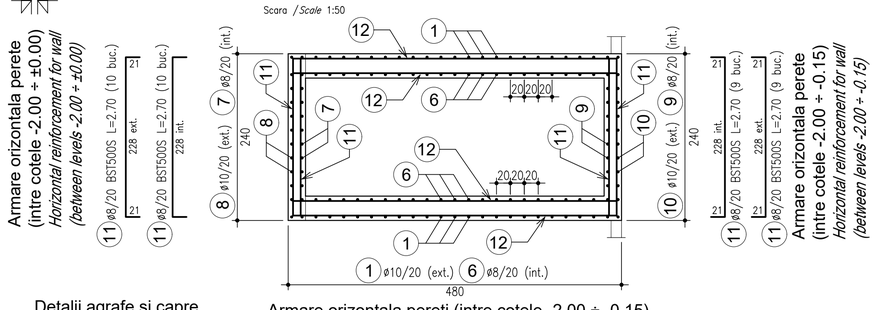

Detalii agrafe si capre

Details of clamps and stirrups.

Scara / *Scale* 1:20

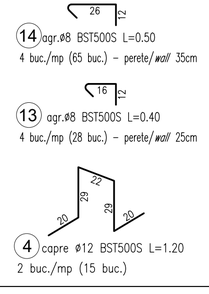

Armare orizontala pereti (intre cotele -2.00 ÷ -0.15)

Horizontal reinforcement for wall (between levels -2.00 ÷ -0.15)

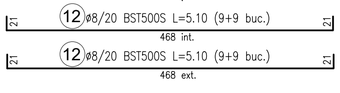

NOTA ELEMENTE INGLOBATE IN BETON

– Inainte de turnarea betonului, in peretii cuvei se vor prevedea tevi metalice pozitiile P1, P2, P3 (TP 100x4), cu rol de preluare a fluidelor din zonele placilor inclinate adiacente cuvei;

– Tevile metalice din pereti se vor dispune inclinat avand partea inferioara (de pe fata exterioara a peretilor cuvei) la cota –0.60.

NOTE REGARDING ELEMENTS EMBEDDED IN CONCRETE

– Before pouring the concrete, metal pipes positions P1, P2, P3 (TP 100x4) will be provided in the walls of the tank, intended for collecting fluids from the areas of the adjacent inclined plates;

– The metal pipes in the walls will be inclined with the bottom part (from the outer face of the tank walls) at level –0.60.

BETON SIMPLU EGALIZARE / *PLAIN CONCRETE LAYER*: 12/15

BETON ARMAT / *REINFORCED CONCRETE*: C30/37 (CEM II 42.5R)

Clasa de expunere / *Exposure class*: XC2

Grad de impermeabilitate / *Degree of impermeability*: P8

Dimensiunea maxima a agregatelor / *Maximum dimension of aggregates*: Ø16

ARMATURA / *REINFORCEMENT*: BST500S

ENTITATE CONTRACTANTA
CONTRACTING ENTITY

C.N.C.F. "C.F.R." - S.A.

CONTRACTANT
CONTRACTOR

Asocierea S.C. ISPCF S.A. - S.C. BAICONS IMPEX SRL

	Nume *Name*	Data *Date*	Semnatura *Signature*
Şef Proiect *Project Manager*	ing. Viorel GORGONETU	11.2024	
Verificat *Checked*	ing. Dan PĂTRAŞCU	11.2024	
Proiectat *Designed*	ing. Franciska SEPRÖDI	11.2024	

"Modernizarea liniilor şi instalaţiilor din Complexul Feroviar Bucureşti"
Studiu de fezabilitate

"Modernization lines and installations in the Bucharest Railway Complex
Feasibility Study

Proiect / *Project* 38 / 2022

Faza / *Phase* S.F. / *F.S.*

Denumire / Title **SUBSTATIE DE TRACTIUNE CHITILA.**
CUVA TRANSFORMATOR 16MVA. ALCATUIRE. PLAN COFRAJ SI ARMARE. SECTIUNI /
CHITILA TRACTION SUBSTATION.
TRANSFORMER TANK 16MVA. STRUCTURE. FORMWORK AND REINFORCEMENT PLAN. SECTIONS

Scara / *Scale* 1:50 1:20

Codificare / Codification System

C O B U | S F | R E Z | D D T | 2 9 | 1 2 | 0 0 5 | R 0 0

Istoricul reviziilor / Revision History

Rev.	Data/Date	Descriere Modificare / Modification description
1		
2		
3		
4		