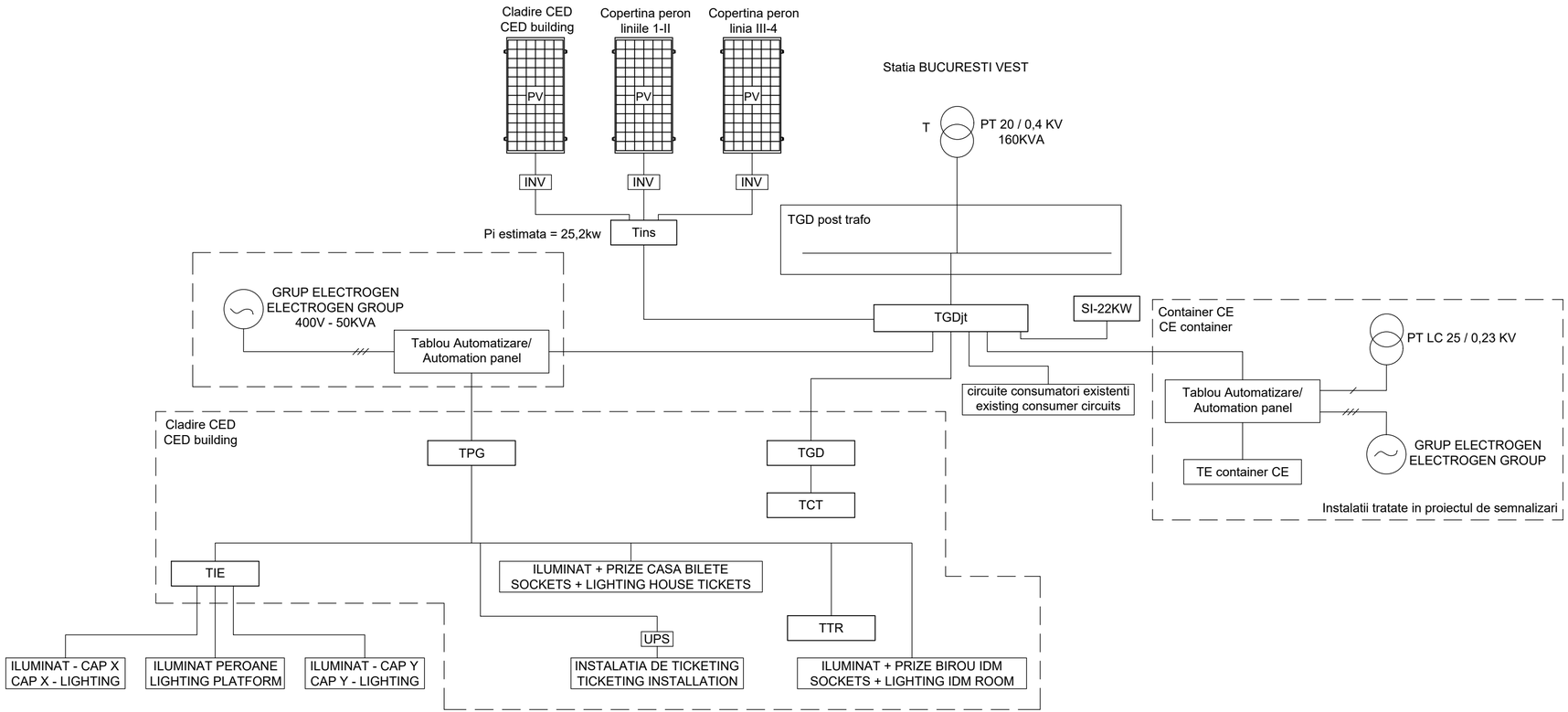

LEGENDĂ / LEGEND:
T - Transformator de tensiune / Voltage transformer
GE - Grup electrogen / Electrogen group
TGDjt - Tablou electric general de distributie joasa tensiune / Low voltage general electric panel
TPG - Tablou electric consumatori prioritari / Safety electric panel
TGD - Tablou general de distributie cladire CED / General distribution switchboard for CED building
TIE - Tablou electric iluminat exterior / Exterior lighting electric panel
TTR - Tablou electric TTR / TTR electric panel
TCT - Tablou electric centrala termica / Electric panel for central heating system
TE container CE - Tablou electric container Centralizare Electronica / Electrical panel of container Electronic Centralization
Tins - Tablou electric anti-insularizare / *Anti-insulation electrical panel*
INV - Invertor trifazat pentru panouri fotovoltaice / *Three-phase inverter for photovoltaic panels*
PV - Panou fotovoltaic monocristalin / *Monocrystalline photovoltaic panel*
SI-22KW - Statie de reincarcare contorizata de 1x22KW / *Metered recharging station of 1x22KW*

ENTITATE CONTRACTANTA
CONTRACTING ENTITY
C.N.C.F. "C.F.R." - S.A.

CONTRACTANT
CONTRACTOR
Asocierea S.C. ISPCF S.A. - S.C. BAICONS IMPEX SRL

	Nume *Name*	Data *Date*	Semnatura *Signature*
Şef Proiect *Project Manager*	ing. Viorel GORGONETU	11.2024	
Verificat *Checked*	ing. Dan PĂTRAŞCU	11.2024	
Proiectat *Designed*	ing. Mircea MIHALACHE	11.2024	

"Modernizarea liniilor şi instalaţiilor din Complexul Feroviar Bucureşti"
Studiu de fezabilitate

"Modernization lines and installations in the Bucharest Railway Complex
Feasibility Study

Proiect / *Project*
38 / 2022

Faza / *Phase*
S.F.
F.S.

Denumire / Title
Statia Bucuresti Vest - Schema bloc de distributie
Bucuresti Vest Station - Distribution block diagram

Scara / *Scale*

Codificare / Codification System

C O B U | S F | I E L | D P A | 2 4 | 0 1 | 0 0 1 | R 0 0

Istoricul reviziilor / Revision History

Rev.	Data/Date	Descriere Modificare / Modification description
1		
2		
3		
4		