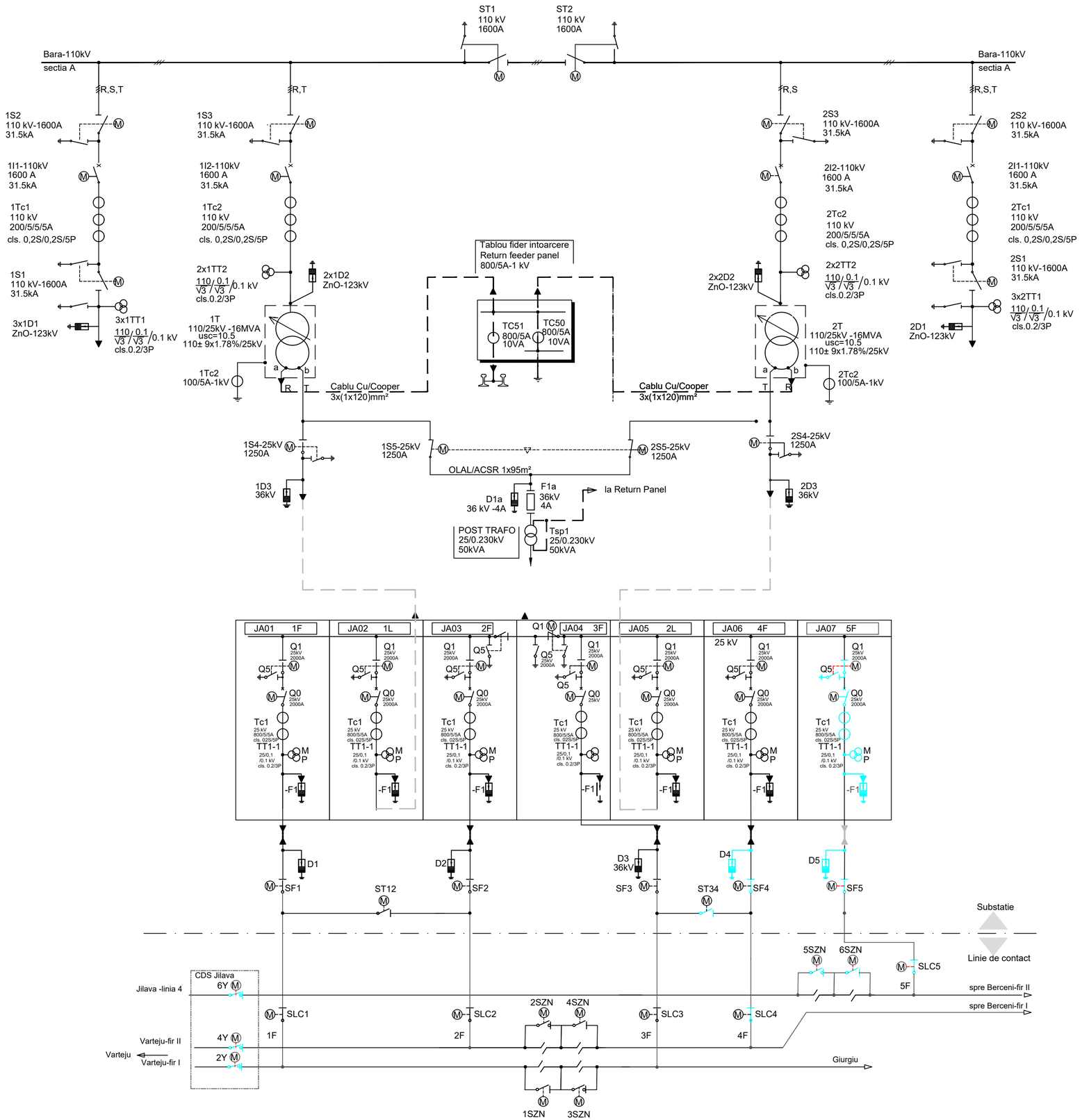

Legenda:
Legend:

- Separator tri/bipolar actionat cu motor cu CLP
  Double-pole disconnector
  motor-operated with grounding contact
- Intreruptor tri/bipolar
  Two-pole circuit-breaker
- Separator monopolar actionat electric cu CLP
  Motor-operated single-pole disconnector
  with grounding contact
- Separator monopolar actionat electric fara CLP
  Motor-operated single-pole disconnector
  without grounding contact
- Separator de sarcina actionat electric
  Switch on load motor-operated
- Transformator monofazat de tractiune
  Single-phase traction transformer
- Tsp1 — Transformator monofazat de putere
  Single-phase power transformer
- Transformator de curent
  Curent transformer
- M P — Transformator de tensiune
  Voltage transformer
- Descarcator
  Surge Arrester
- Interblocaj
  Interlock
- Siguranta fuzibila
  Fuse
- Priza de pamant
  Earth system
- Cablu de energie electrica
  Power cable
- sectie bare -110kV — Sistem de bare bifazat
  Two-phase bus-bar

ENTITATE CONTRACTANTA
CONTRACTING ENTITY

C.N.C.F. "C.F.R." - S.A.

CONTRACTANT
CONTRACTOR

Asocierea S.C. ISPCF S.A. - S.C. BAICONS IMPEX SRL

	Nume *Name*	Data *Date*	Semnatura *Signature*
Şef Proiect *Project Manager*	Gorgonetu Viorel	11.2024	
Verificat *Checked*	Spack Cristina	11.2024	
Proiectat *Designed*	Spack Cristina	11.2024	

"Modernizarea liniilor şi instalaţiilor din Complexul Feroviar Bucureşti"
Studiu de fezabilitate

"Modernization lines and installations in the Bucharest Railway Complex
Feasibility Study

Proiect / *Project*: 38 / 2022

Faza / *Phase*: S.F. / *F.S.*

Denumire / Title

STE Jilava. Schema electrică monofilară
Jilava traction substation. Electric diagram

Scara / *Scale*

Codificare / Codification System

C O B U S F L E A D P A 2 1 0 1 0 0 1 R 0 0

Istoricul reviziilor / Revision History

Rev.	Data/Date	Descriere Modificare / Modification description
1		
2		
3		
4		