ANCORAREA SEMICOMPENSATA A CATENAREI
CATENARY HALF–COMPENSATED ANCHORING

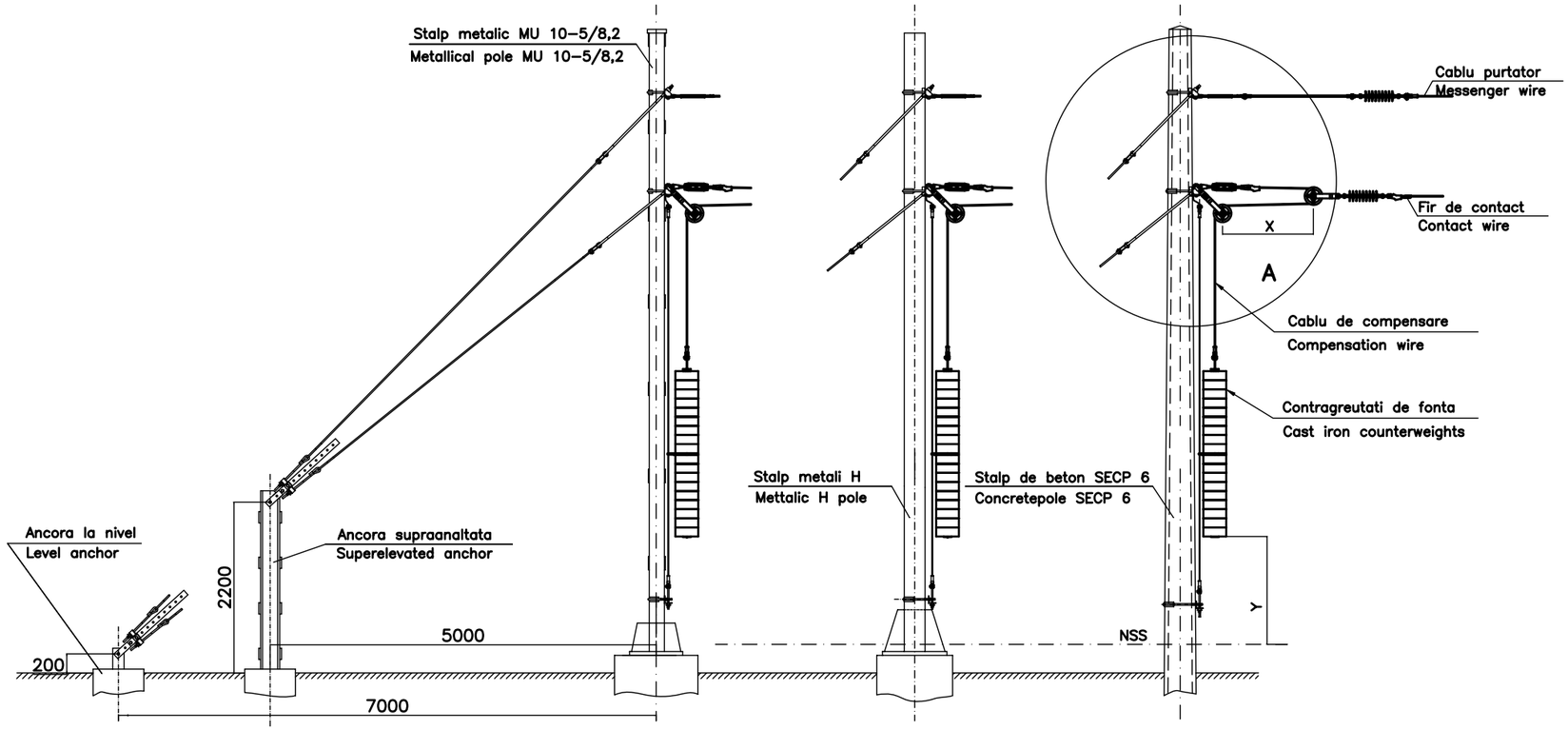

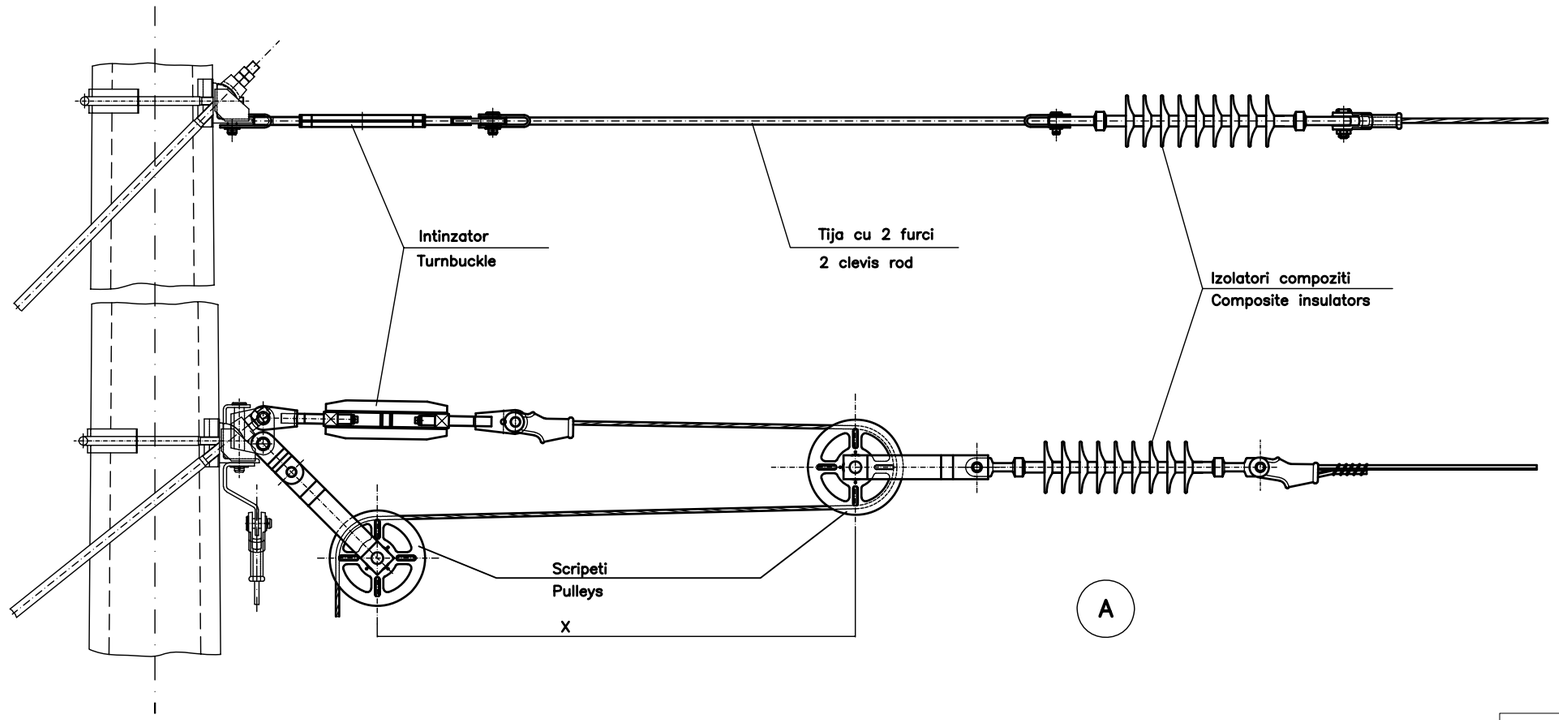

ANEXA 14
ANNEX 14