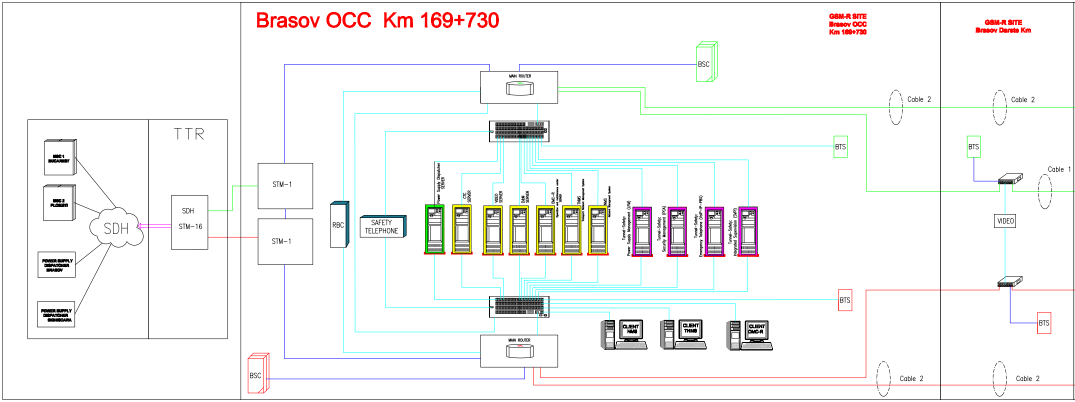
MSC 1
BUCAREST
MSC 2
PLOIESTI
POWER SUPPLY
DISPATCHER
BRASOV
POWER SUPPLY
DISPATCHER
SIGHISOARA
SDH
TTR
SDH
STM−16
Brasov OCC Km 169+730
STM−1
STM−1
RBC
SAFETY
TELEPHONE
MAIN ROUTER
MAIN ROUTER
BSC
BSC
Power Supply Dispatcher
SERVER
CTC
SERVER
VIDEO
SERVER
D&M
SERVER
OMC−R
Operation and maintenance center
SERVER
TNMS
Transport Network Management System
NMS
Network Management System
Tunnel−Safety:
Power Supply Management (LFM)
Tunnel−Safety:
Security Management (PCA)
Tunnel−Safety:
Emergency Telephone (VoIP−IP−PBX)
Tunnel−Safety:
Integrated Supervision (SVPI)
CLIENT
NMS
CLIENT
TNMS
CLIENT
OMC-R
BTS
BTS
GSM-R SITE
Brasov OCC
Km 169+730
Cable 2
Cable 2
GSM-R SITE
Brasov Darste Km
BTS
VIDEO
BTS
Cable 2
Cable 1
Cable 2

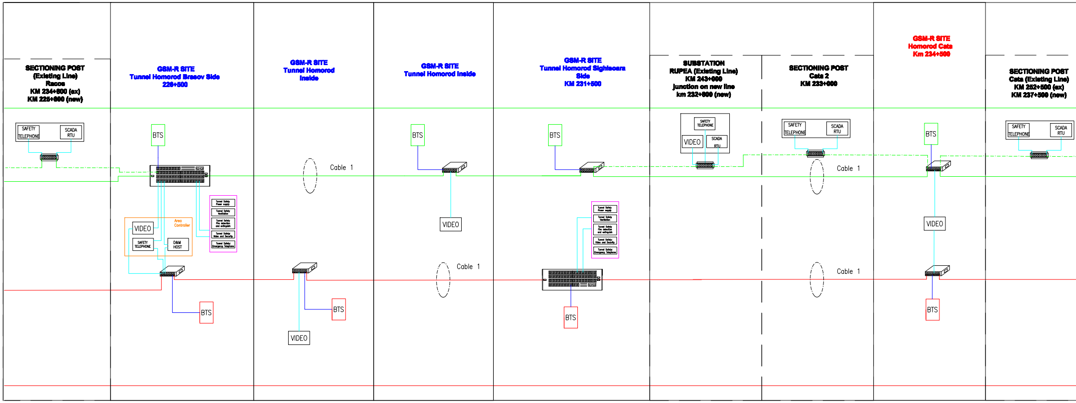
SECTIONING POST
(Existing Line)
Racos
KM 234+800 (ex)
KM 225+800 (new)
SAFETY
TELEPHONE
SCADA
RTU
GSM-R SITE
Tunnel Homorod Brasov Side
226+500
BTS
VIDEO
SAFETY
TELEPHONE
D&M
HOST
Area
Controller
Tunnel Safety
Power supply
Tunnel Safety
Ventilation
Tunnel Safety
Fire detection
and extinguish
Tunnel Safety:
Video and Security
Tunnel Safety:
Emergency Telephone
BTS
GSM-R SITE
Tunnel Homorod
Inside
Cable 1
BTS
VIDEO
GSM-R SITE
Tunnel Homorod Inside
BTS
VIDEO
Cable 1
GSM-R SITE
Tunnel Homorod Sighisoara
Side
KM 231+500
BTS
Tunnel Safety
Power supply
Tunnel Safety
Ventilation
Tunnel Safety
Fire detection
and extinguish
Tunnel Safety:
Video and Security
Tunnel Safety:
Emergency Telephone
BTS
SUBSTATION
RUPEA (Existing Line)
KM 243+000
junction on new line
km 232+800 (new)
SAFETY
TELEPHONE
VIDEO
SCADA
RTU
SECTIONING POST
Cata 2
KM 233+000
SAFETY
TELEPHONE
SCADA
RTU
Cable 1
Cable 1
GSM-R SITE
Homorod Cata
Km 234+500
BTS
VIDEO
BTS
SECTIONING POST
Cata (Existing Line)
KM 252+500 (ex)
KM 237+500 (new)
SAFETY
TELEPHONE
SCADA
RTU

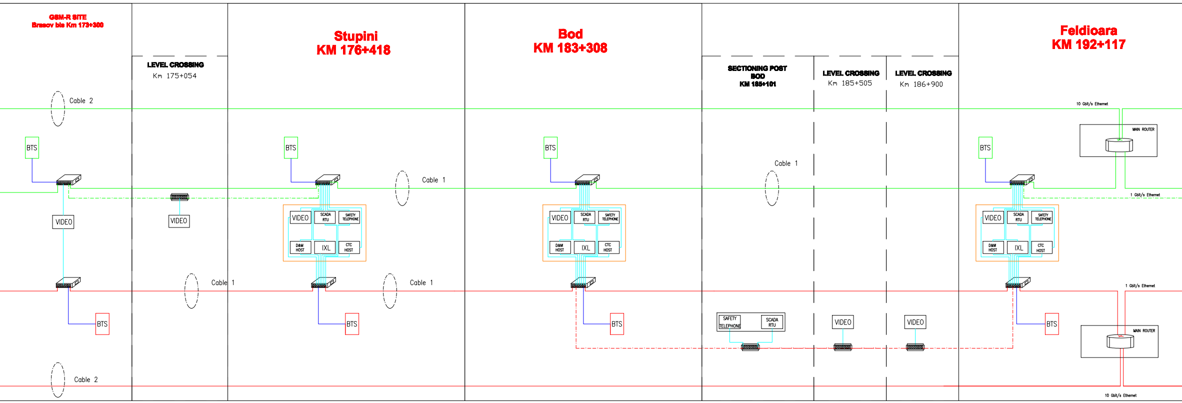
GSM-R SITE
Brasov bis Km 173+300
Cable 2
BTS
VIDEO
BTS
Cable 2
LEVEL CROSSING
Km 175+054
VIDEO
Cable 1
Stupini
KM 176+418
BTS
VIDEO
SCADA RTU
SAFETY TELEPHONE
D&M HOST
IXL
CTC HOST
BTS
Cable 1
Cable 1
Bod
KM 183+308
BTS
VIDEO
SCADA RTU
SAFETY TELEPHONE
D&M HOST
IXL
CTC HOST
BTS
SECTIONING POST
BOD
KM 185+101
Cable 1
SAFETY TELEPHONE
SCADA RTU
LEVEL CROSSING
Km 185+505
VIDEO
LEVEL CROSSING
Km 186+900
VIDEO
Feldioara
KM 192+117
10 Gbit/s Ethernet
MAIN ROUTER
1 Gbit/s Ethernet
BTS
VIDEO
SCADA RTU
SAFETY TELEPHONE
D&M HOST
IXL
CTC HOST
BTS
1 Gbit/s Ethernet
MAIN ROUTER
10 Gbit/s Ethernet

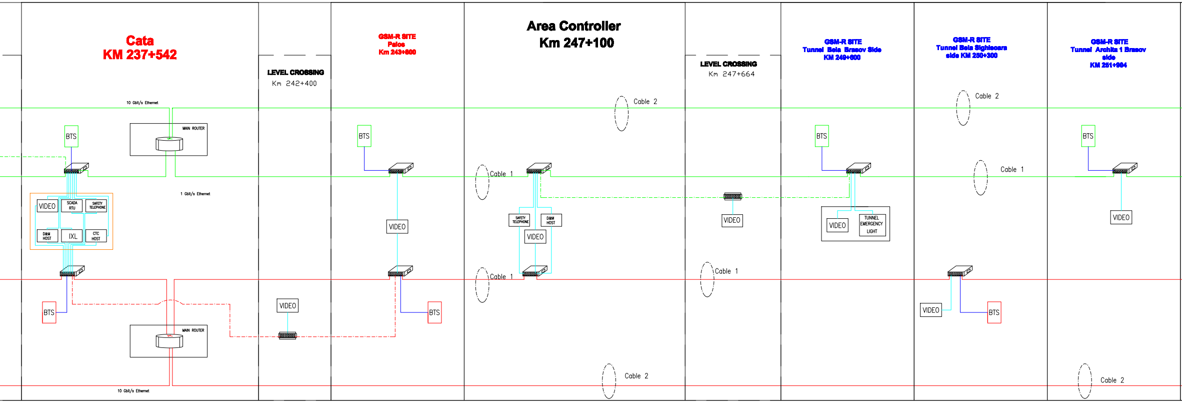
Cata
KM 237+542
10 Gbit/s Ethernet
MAIN ROUTER
BTS
1 Gbit/s Ethernet
VIDEO
SCADA RTU
SAFETY TELEPHONE
D&M HOST
IXL
CTC HOST
BTS
MAIN ROUTER
10 Gbit/s Ethernet
LEVEL CROSSING
Km 242+400
VIDEO
GSM-R SITE
Palos
Km 243+800
BTS
VIDEO
BTS
Area Controller
Km 247+100
Cable 2
Cable 1
SAFETY TELEPHONE
D&M HOST
VIDEO
Cable 1
Cable 2
LEVEL CROSSING
Km 247+664
VIDEO
Cable 1
GSM-R SITE
Tunnel Bela Brasov Side
KM 249+800
BTS
VIDEO
TUNNEL EMERGENCY LIGHT
GSM-R SITE
Tunnel Bela Sighisoara
side KM 250+300
Cable 2
Cable 1
VIDEO
BTS
GSM-R SITE
Tunnel Archita 1 Brasov
side
KM 251+904
BTS
VIDEO
Cable 2

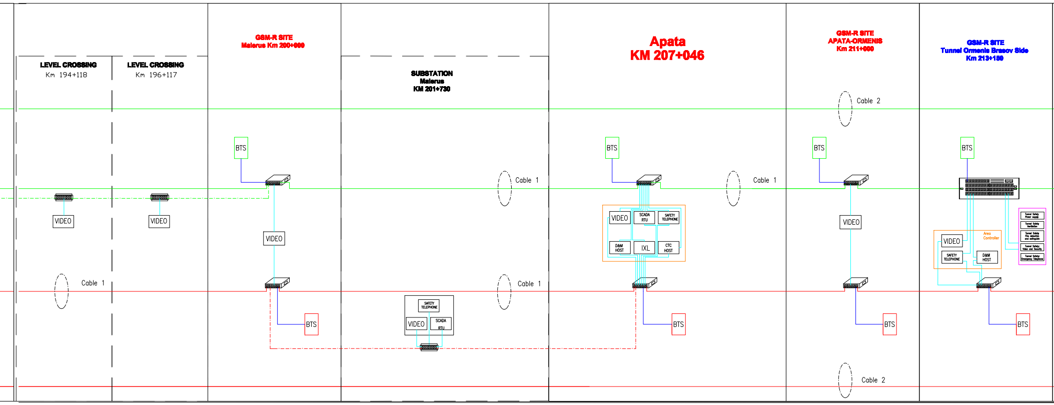
LEVEL CROSSING
Km 194+118
LEVEL CROSSING
Km 196+117
GSM-R SITE
Maierus Km 200+000
SUBSTATION
Maierus
KM 201+730
Apata
KM 207+046
GSM-R SITE
APATA-ORMENIS
Km 211+000
GSM-R SITE
Tunnel Ormenis Brasov Side
Km 213+150
Cable 1
Cable 1
Cable 1
Cable 1
Cable 2
Cable 2
BTS
VIDEO
SAFETY TELEPHONE
SCADA RTU
D&M HOST
IXL
CTC HOST
Area Controller
Tunnel Safety Power supply
Tunnel Safety Ventilation
Tunnel Safety Fire detection and extinguish
Tunnel Safety: Video and Security
Tunnel Safety: Emergency Telephone

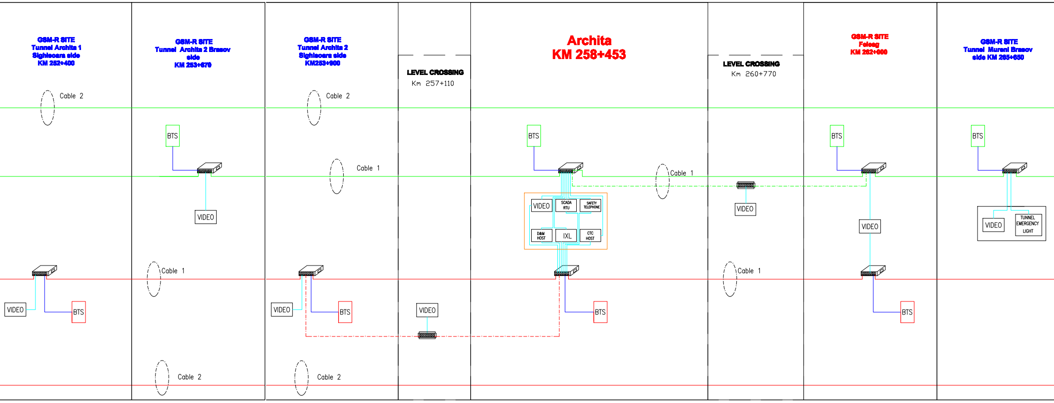
GSM-R SITE
Tunnel Archita 1
Sighisoara side
KM 252+400
GSM-R SITE
Tunnel Archita 2 Brasov side
KM 253+670
GSM-R SITE
Tunnel Archita 2
Sighisoara side
KM253+900
LEVEL CROSSING
Km 257+110
Archita
KM 258+453
LEVEL CROSSING
Km 260+770
GSM-R SITE
Feleag
KM 262+000
GSM-R SITE
Tunnel Mureni Brasov side KM 265+650
Cable 1
Cable 1
Cable 1
Cable 1
Cable 2
Cable 2
Cable 2
Cable 2
BTS
VIDEO
SCADA RTU
SAFETY TELEPHONE
D&M HOST
IXL
CTC HOST
TUNNEL EMERGENCY LIGHT

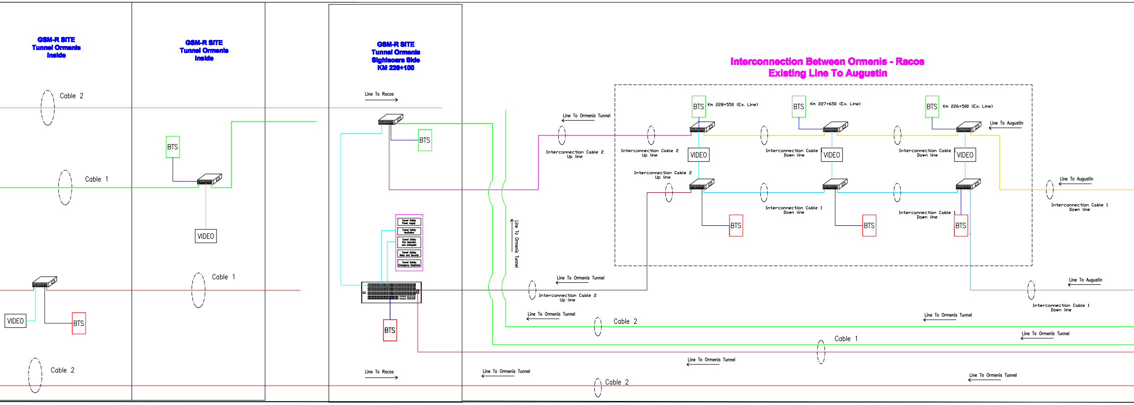
GSM-R SITE
Tunnel Ormenis
Inside
GSM-R SITE
Tunnel Ormenis
Inside
GSM-R SITE
Tunnel Ormenis
Sighisoara Side
KM 229+100
Interconnection Between Ormenis - Racos
Existing Line To Augustin
Cable 2
Cable 1
Cable 2
Cable 1
BTS
VIDEO
BTS
VIDEO
Line To Racos
Line To Racos
BTS
BTS
Tunnel Safety Power supply
Tunnel Safety Ventilation
Tunnel Safety Fire detection and extinguish
Tunnel Safety: Video and Security
Tunnel Safety: Emergency Telephone
Line To Ormenis Tunnel
BTS
Km 228+550 (Ex. Line)
BTS
Km 227+650 (Ex. Line)
BTS
Km 226+500 (Ex. Line)
Line To Augustin
Interconnection Cable 2
Up line
Interconnection Cable 2
Up line
Interconnection Cable
Down line
Interconnection Cable
Down line
VIDEO
VIDEO
VIDEO
Interconnection Cable 2
Up line
Interconnection Cable 1
Down line
Interconnection Cable 1
Down line
Line To Augustin
Interconnection Cable 1
Down line
BTS
BTS
BTS
Line To Ormenis Tunnel
Line To Ormenis Tunnel
Interconnection Cable 2
Up line
Line To Augustin
Interconnection Cable 1
Down line
Line To Ormenis Tunnel
Cable 2
Line To Ormenis Tunnel
Line To Ormenis Tunnel
Cable 1
Line To Ormenis Tunnel
Line To Ormenis Tunnel
Line To Ormenis Tunnel
Cable 2
Line To Ormenis Tunnel

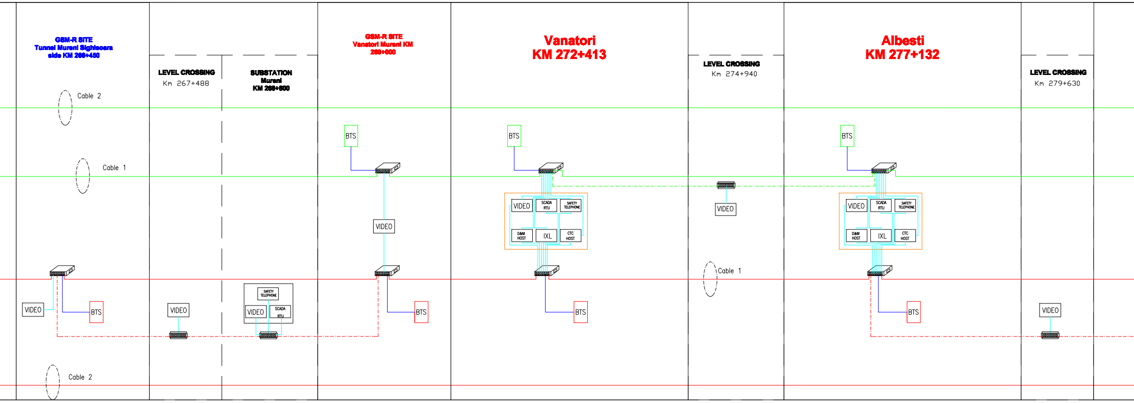
GSM-R SITE
Tunnel Mureni Sighisoara
side KM 266+450
LEVEL CROSSING
Km 267+488
SUBSTATION
Mureni
KM 268+800
GSM-R SITE
Vanatori Mureni KM
269+000
Vanatori
KM 272+413
LEVEL CROSSING
Km 274+940
Albesti
KM 277+132
LEVEL CROSSING
Km 279+630
Cable 2
Cable 1
BTS
BTS
BTS
VIDEO
VIDEO
SCADA RTU
SAFETY TELEPHONE
D&M HOST
IXL
CTC HOST
VIDEO
VIDEO
SCADA RTU
SAFETY TELEPHONE
D&M HOST
IXL
CTC HOST
Cable 1
VIDEO
BTS
VIDEO
SAFETY TELEPHONE
VIDEO
SCADA RTU
BTS
BTS
BTS
VIDEO
Cable 2

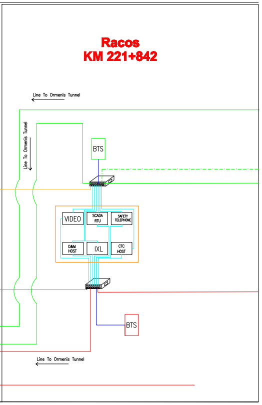
Racos
KM 221+842
Line To Ormenis Tunnel
Line To Ormenis Tunnel
Line To Ormenis Tunnel
BTS
VIDEO
SCADA RTU
SAFETY TELEPHONE
D&M HOST
IXL
CTC HOST
BTS

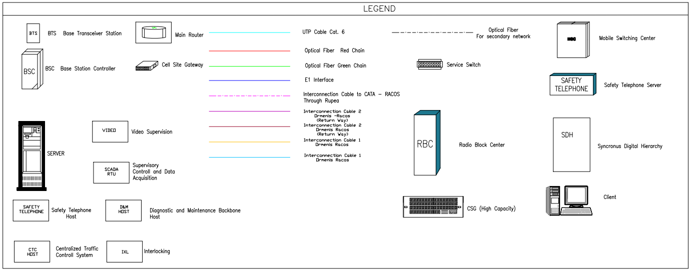
LEGEND
BTS
BTS Base Transceiver Station
Main Router
UTP Cable Cat. 6
Optical Fiber
For secondary network
Mobile Switching Center
BSC
BSC Base Station Controller
Cell Site Gateway
Optical Fiber Red Chain
Optical Fiber Green Chain
Service Switch
E1 Interface
SAFETY TELEPHONE
Safety Telephone Server
Interconnection Cable to CATA – RACOS
Through Rupea
Interconnection Cable 2
Ormenis -Racos
(Return Way)
Interconnection Cable 2
Ormenis Racos
(Return Way)
Interconnection Cable 1
Ormenis Racos
Interconnection Cable 1
Ormenis Racos
SERVER
VIDEO
Video Supervision
SCADA RTU
Supervisory
Controll and Data
Acquisition
RBC
Radio Block Center
SDH
Syncronus Digital Hierarchy
Client
SAFETY TELEPHONE
Safety Telephone
Host
D&M HOST
Diagnostic and Maintenance Backbone
Host
CSG (High Capacity)
CTC HOST
Centralized Traffic
Controll System
IXL
Interlocking

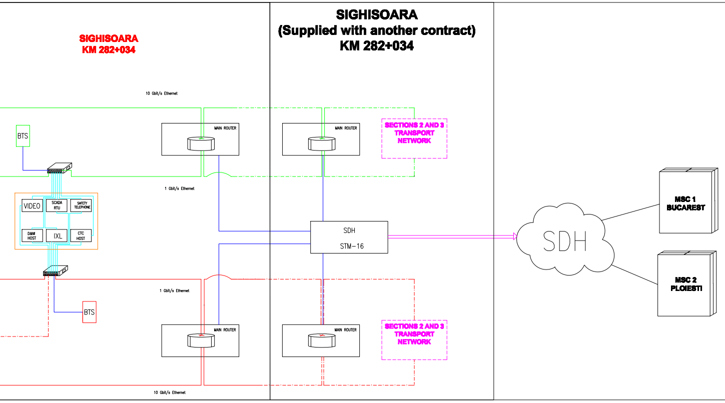
SIGHISOARA
KM 282+034
SIGHISOARA
(Supplied with another contract)
KM 282+034
10 Gbit/s Ethernet
BTS
MAIN ROUTER
MAIN ROUTER
SECTIONS 2 AND 3
TRANSPORT
NETWORK
1 Gbit/s Ethernet
VIDEO
SCADA RTU
SAFETY TELEPHONE
D&M HOST
IXL
CTC HOST
SDH
STM–16
SDH
MSC 1
BUCAREST
MSC 2
PLOIESTI
1 Gbit/s Ethernet
BTS
MAIN ROUTER
MAIN ROUTER
SECTIONS 2 AND 3
TRANSPORT
NETWORK
10 Gbit/s Ethernet

Indice Index	Data Date	Modificare Modification/Revision	Proiectant Designer	Aprobat Consultant Approved Consultant	Aprobat CFR Approved CFR
D					
C					
B					
A					

GUVERNUL ROMANIEI
ROMANIAN GOVERNMENT

PROIECT FINANȚAT DE UNIUNEA EUROPEANĂ
EUROPEAN UNION FINANCED PROJECT

CLIENT / CLIENT

C.N.C.F. "C.F.R." - S.A.

CONSULTANT / CONSULTANT

			Data Date	Semnătură Signature
Aprobat Approved	Şef proiect Project manager	R. Liuzza	30-11-2011	
Aprobat Approved	Coordonator Secţiune 1 Section 1 Coordinator	C. Gambelli	30-11-2011	
Verificat Checked	Expert Cheie Key Expert	P. Amodio	23-11-2011	
Aprobat Approved	Responsabil GSM-R GSM-R Responsible	G. Clemenza	16-11-2011	
Întocmit Elaborated	Proiectant Designer	L. Restino	14-11-2011	

Reabilitarea liniei de cale ferată Braşov - Simeria, parte componentă a coridorului IV Pan European, pentru circulaţia trenurilor cu viteza maximă de 160 km/h,
Tronsonul: Braşov - Sighişoara
Rehabilitation of the railway line Braşov - Simeria, component Part of the IV Pan-European Corridor, for the trains circulation with maximum speed of 160 km/h,
Section: Braşov - Sighişoara

Proiect/Project
2004/RO/16/P/PA/003

Faza / Phase:
P.Th. / T.D.

Denumire desen / Drawing Title :

Backbone Transport Network Architecture
Arhitectura Retelei de Transport

Codificare / Codification System
Scara / Scale
LOT / LOT
Nr. / No
01 / 01

EA51 01 C 00 DX SE 00 1 4 002 0