ELEVATIE A-A
A-A ELEVATION
Sc. 1:50

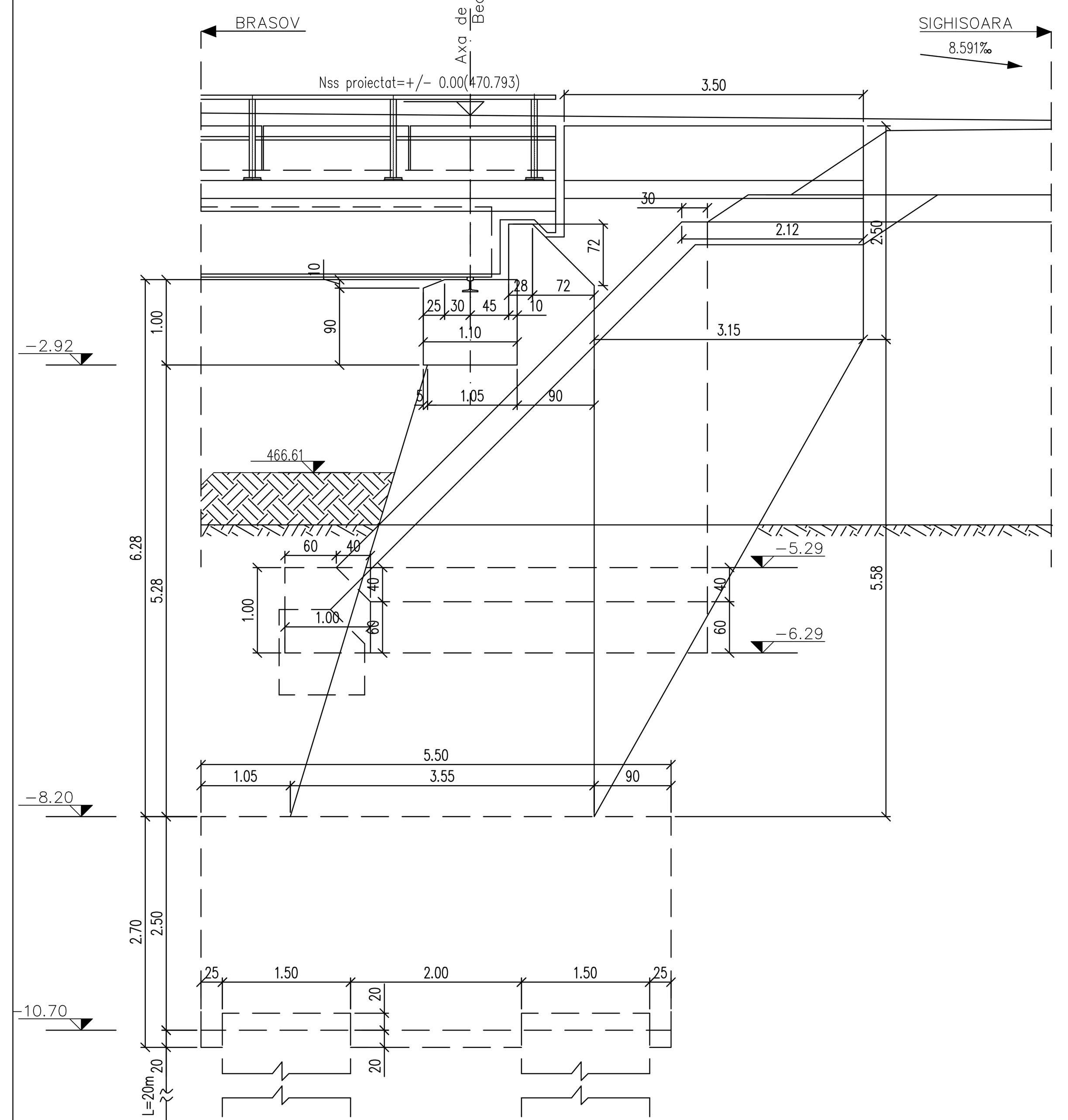

SECTIUNE D-D
D-D CROSS SECTION
Sc. 1:50

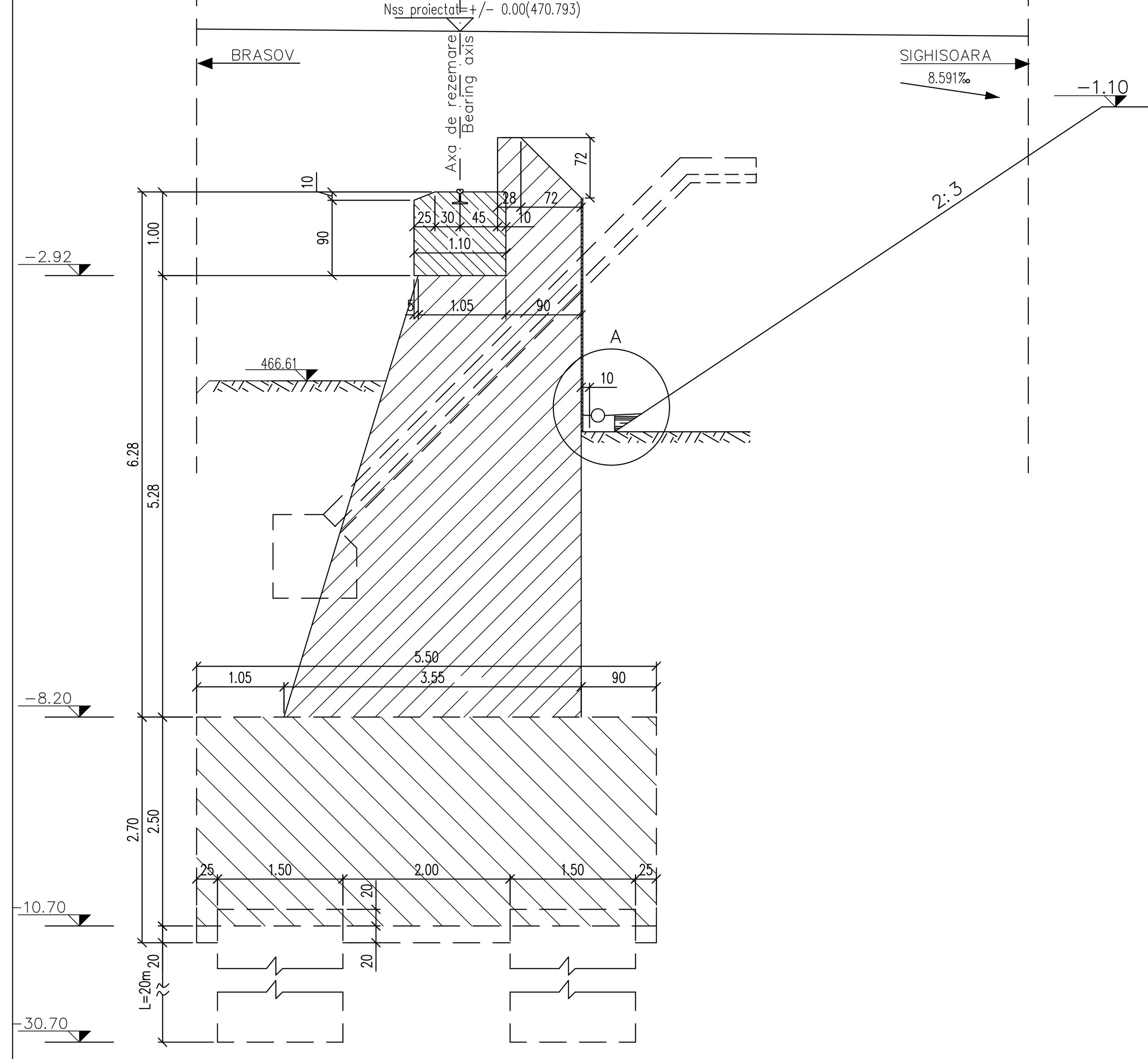

VEDERE C-C
C-C VIEW
Sc. 1:50
(Culeea "Sighisoara"/'Sighisoara' abutment)

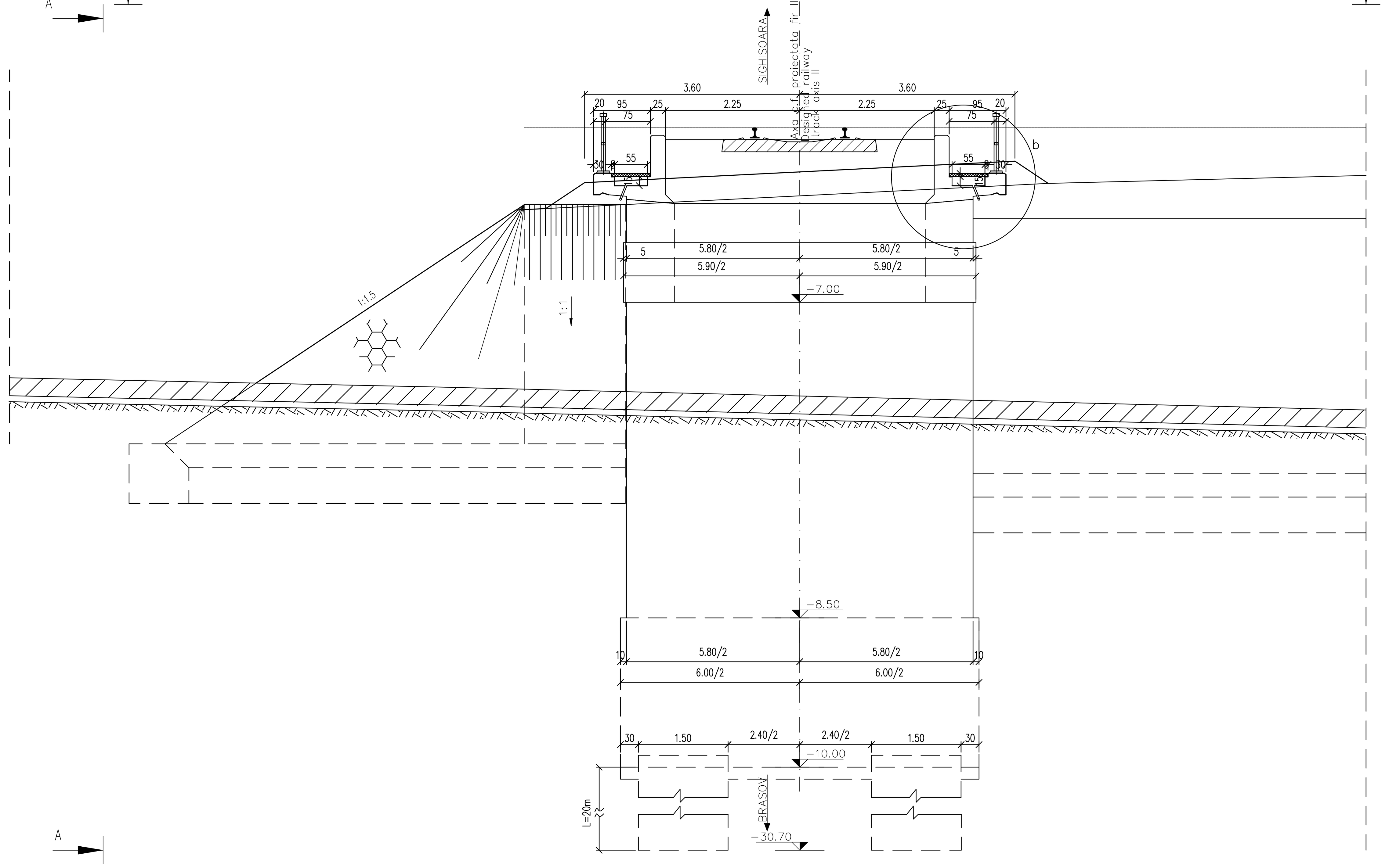

VEDERE IN PLAN B-B
B-B PLAN VIEW
Sc. 1:50

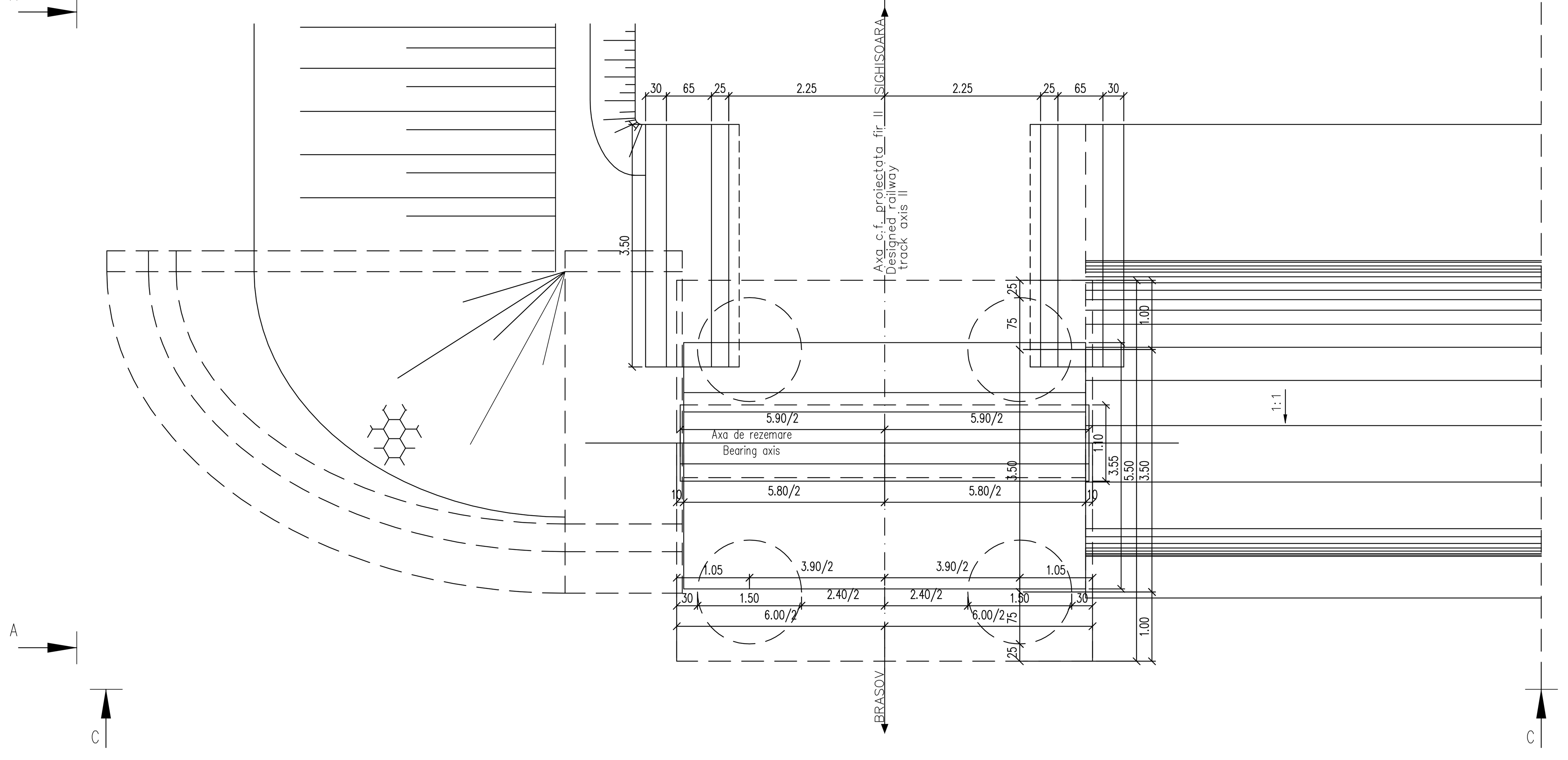

PLAN AMPLASAMENT / SITE PLAN

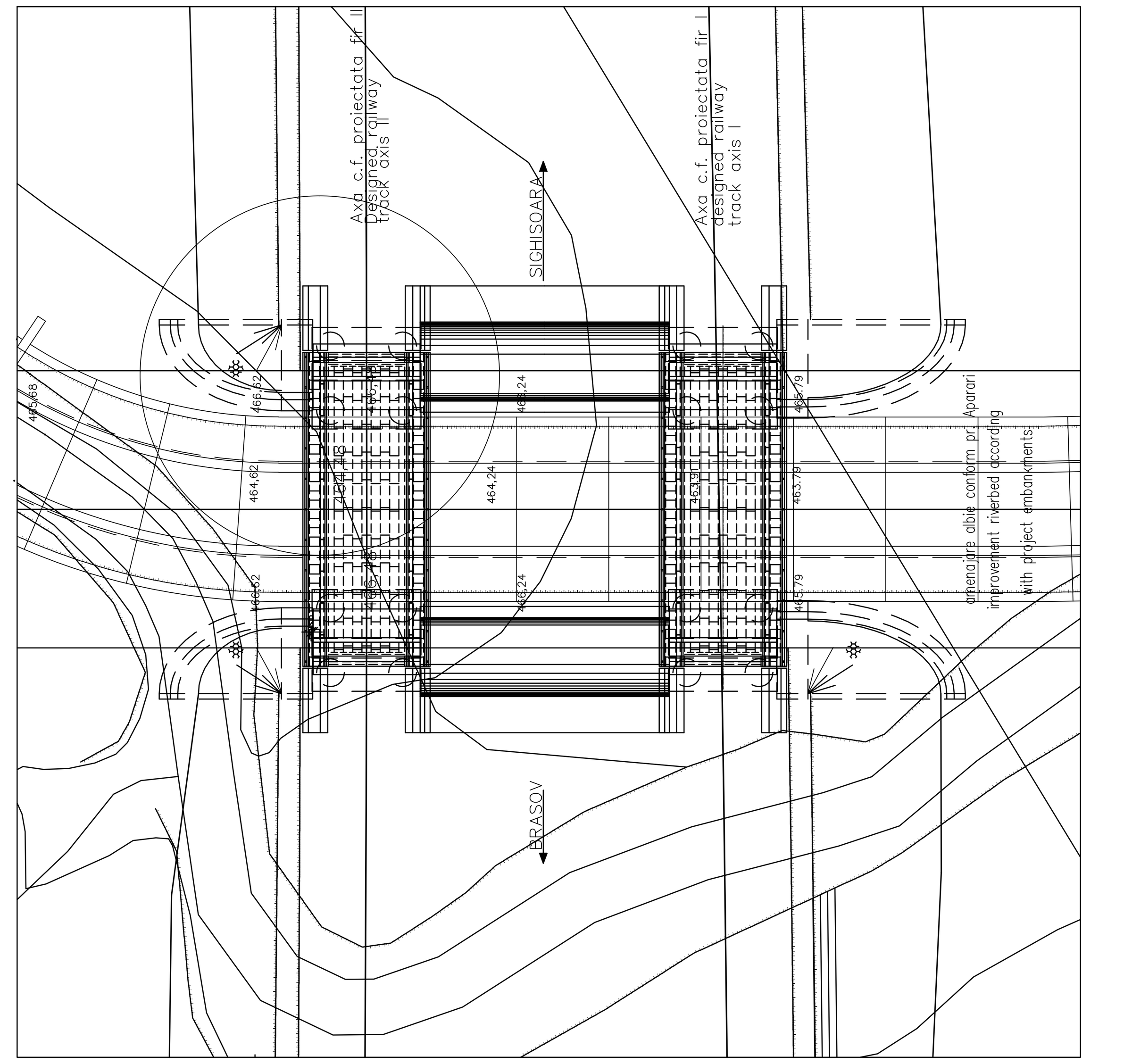

Se interzice copierea, difuzarea, imprumutarea sau utilizarea in alte scopuri, fara permisiunea AREX LIDER COMPANY ca proprietar al desenului.
This drawing is forbidden to be copied, lent or used in other purposes than those previously approved by AREX LIDER COMPANY as its owner.

In cazul in care temperatura in timpul turnarii este scazuta, se vor folosi cimenturile cu rezistenta initiala mare, R si aditivi acceleratori, iar in cazul turnarii pe timp calduros, cimenturile cu rezistenta initiala uzuala, N si aditivi intarzietori (conf. NE 012/2-2010 si tabelului 2 din SR EN 197-1:2002)
When the temperature during the casting is low, cements with high initial resistance, R and accelerating additives shall be used and when it is cast during warm weather, cements with common initial resistance, N and delaying additives shall be used (according the norm NE 012/2-2010 and table 2 for the SR EN197-1:2002).

ATENTIE/ATENTION

Aprovizionarea aparatelor de reazem se va face inaintea executarii cuzinetilor si a banchetei acestora. In cazul in care inaltimea aparatelor de reazem aprovizionate difera fata de cea considerata in proiect se vor modifica inaltimile pe reazem corespunzator cu noile aparate.
The bearing blocks shall be supplied before building the bearings and their seats. In case the height of the supplied bearing blocks differs from that given in the project, the heights on the seats shall be adjusted so as to comply with the new devices.

NOTA

1. Prezentul plan s-a intocmit in conformitate cu dispozitia generala..
2. Executia partilor superioare ale cuzinetilor, amplasate deasupra banchetei cuzinetilor, se va face numai dupa procurarea aparatelor de reazem.
Nivelele superioare ale cuzinetilor se vor stabili dupa procurarea aparatelor de reazem, in functie de inaltimile fiecarui tip de aparat.
Executia zidurilor intoarse si a zidului de garda se va face dupa asezarea tablierului pe reazeme.
3. La executie se vor respecta cu strictete prevederile din "Normativ pentru producerea betonului", indicativ NE 012/1-2007 si "Normativ pentru producerea betonului si executarea lucrarilor din beton, beton armat si beton precomprimat. Partea 2: Executarea lucrarilor din beton", indicativ NE 012/2-2010, iar verificarea calitatii lucrarilor si receptionarea lor se va face conform normativului C56-1985.
4. Constructia se incadreaza in categoria B de importanta. Constructii de importanta deosebita, modelul 1 de asigurare a calitatii conform HG 766/97.
5. Podul corespunde la convoaiele de calcul UIC (LM71,SW/2).
6. Corectia albiei se va realiza conform proiect aparari.

NOTE:

1. This plan has been drawn up according to the general layout.
2. The upper parts of the bearing placed over the bearing seat shall be built only after the procurement of the bearing blocks. the upper level of the bearings shall be established after the procurement of the bearing blocks depending on the height of the each bearing block type.
The reverted walls and the guard wall shall be carried out after putting the desk on the supports.
3. The execution will strictly comply with the provisions of "Normative for concrete production NE 012/1-2007 and "Practice code for the concrete production and works execution, reinforced and pre-stressed concrete - Part 2: The execution of concrete works." NE 012/2-2010, and the quality and the reception of the works shall be made accordingly to Norm C 56-1985.
4. The construction is classified in the B category of importance. Special importance constructions, model 1 for quality ensuring according to HG 766/97.
5. Bridge convoys calculation corresponds to UIC (LM71,SW/2).
6. The correction of the river bed will be made according to the consolidation project.

LEGENDA BETOANELOR/CONCRETE LIST

Beton armat in elementele prefabricate
Reinforced concrete in the prefabricated elements
C35/45-CEM II/A-S 32,5-(XC4+XF3+XA2)-A/C=0,50-Dmax22-Cl 0,20

Beton simplu in fundatia elementelor prefabricate ,in fundatia aripilor si in fundatia putului
Plain concrete in the prefabricated elements ,wing foundation and pit foundation
C25/30-CEM II/A-S 32,5(XF1)-A/C=0,50-Dmax32-Cl 0,20

Beton simplu de panta si in pinten
Plain concrete for slope and in the corbel
C 25/30-CEM II/A-S 32,5-(XF3)-A/C=0,55-Dmax16-Cl 0,20

DETALIUL "A"/DETAIL "A"
scara 1:20

SISTEM DE DRENARE A APELOR DIN SPATELE CULEELOR
SYSTEM FOR DRAINAGE THE WATER FROM BEHIND THE ABUTMENTS

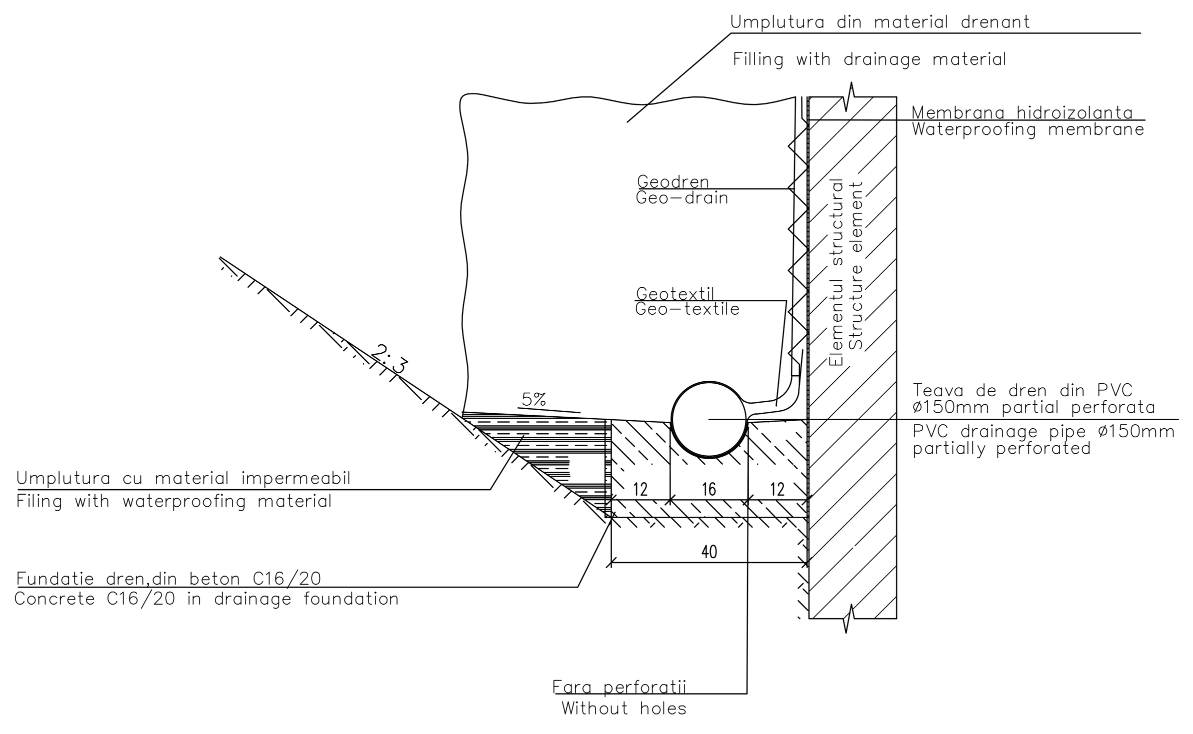

DTALIUL ,,b"/,,b" DETAIL
scara 1:20

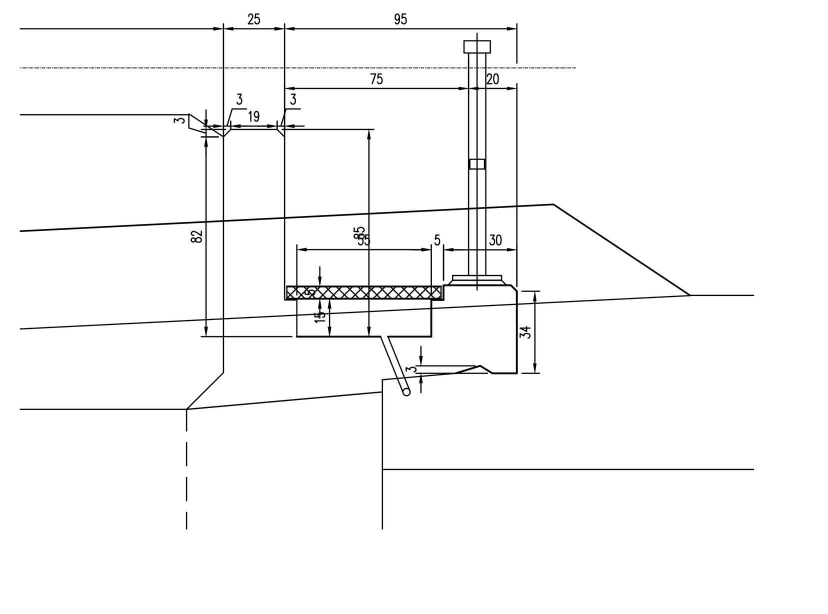

Indice / Index	Data / Date	Modificare / Modification/Revision	Proiectant / Designer	Aprobat Consultant / Approved Consultant	Aprobat CFR / Approved CFR
C					
B					
A	11.2011	Revizia 1 / 1 Revision	Secu Andrei Razvan		

GUVERNUL ROMANIEI / ROMANIAN GOVERNMENT
PROIECT FINANŞAT DE UNIUNEA EUROPEANĂ / EUROPEAN UNION FINANCED PROJECT

CLIENT / CLIENT
C.N.C.F. "C.F.R." - S.A.

ITALFERR GRUPPO FERROVIE DELLO STATO Joint Venture leader — Scott Wilson — OBERMEYER PLANEN + BERATEN GmbH — TECNIC Consulting Engineers

CONSULTANT / CONSULTANT

			Data / Date	Semnătură / Signature
Aprobat / Approved	Şef proiect / Project manager	R. Liuzza		
Aprobat / Approved	Coordonator Secţiune 1 / Section 1 Coordinator	C. Gambelli		
Verificat / Checked	Expert Cheie / Key Expert	V.Kallidromitis		

SUBCONTRACTANT / SUBCONTRACTOR — AREX COMPANY

Aprobat / Approved	Responsabil Subconsultant / Subconsultant Responsible	A. Dinulescu Stanciu	11.2011	
Întocmit / Elaborated	Proiectant / Designer	Secu Andrei Razvan	11.2011	

Reabilitarea liniei de cale ferata Braşov - Simeria, parte componentă a coridorului IV Pan European, pentru circulaţia trenurilor cu viteza maximă de 160 km/h, Tronsonul : Brasov - Sighisoara
Rehabilitation of the railway line Braşov - Simeria, component Part of the IV Pan-European Corridor, for the trains circulation with maximum speed of 160 km/h, Section : Brasov - Sighisoara

Proiect/Project: 2004/RO/16/P/PA/003
Faza / Phase: P.Th. / T.D.

Denumire desen / Drawing Title : **INTERVAL / SECTION APATA - RACOS**
POD / BRIDGE Km 220+170.690 L=15,00m
PLAN COFRAJ CULEE SIGHISOARA -POD FIR II /
/SIGHISOARA ABUTMENTS FORMWORK PLANE -TRACK II BRIDGE

Codificare / Codification System — Scara / Scale 1:50 / 1:20/1:5 — LOT / LOT — Nr. / No 01 / 01

E A 5 1 | 0 1 | E | 1 0 | B B | P V | 0 2 | 0 | 2 | 0 0 6 | 1

594x1410