DETALIU SECTIUNE TRANSVERSALA COPERTINA sc. 1 : 25

CROSS SECTION CANOPY *sc. 1 : 25*

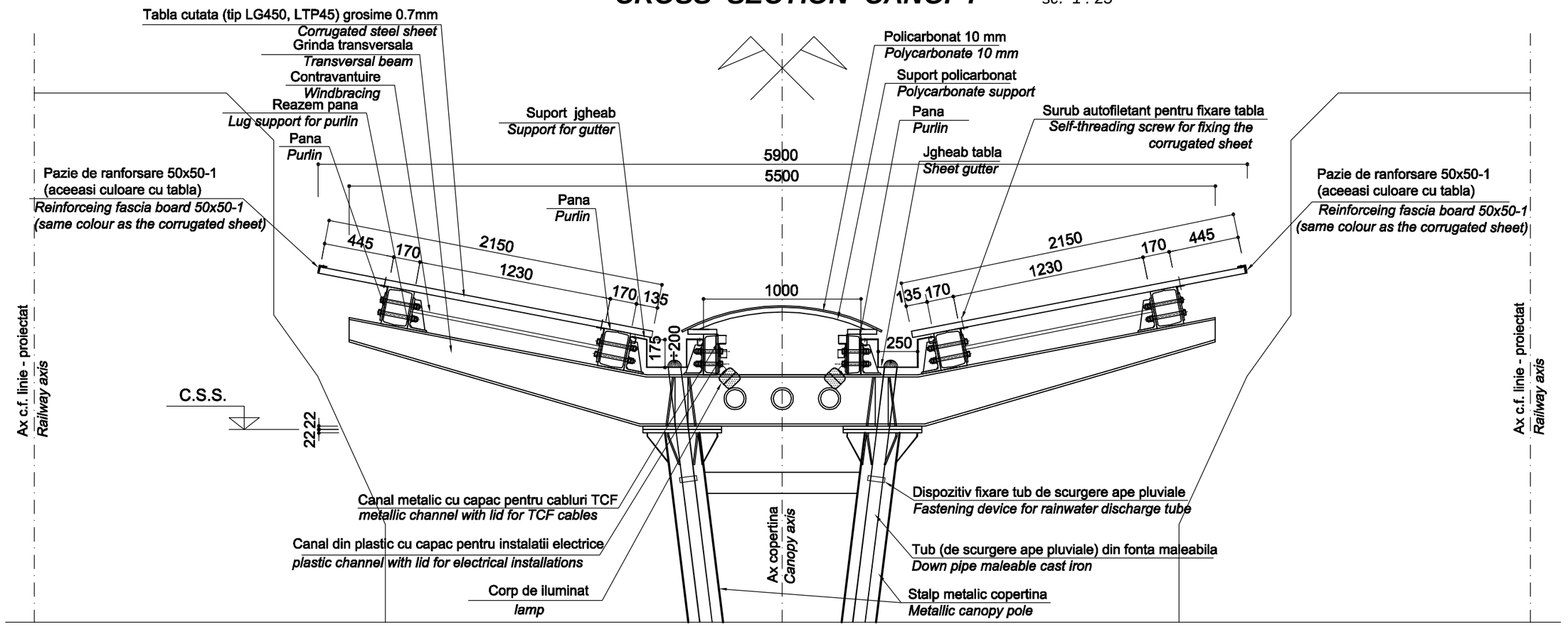

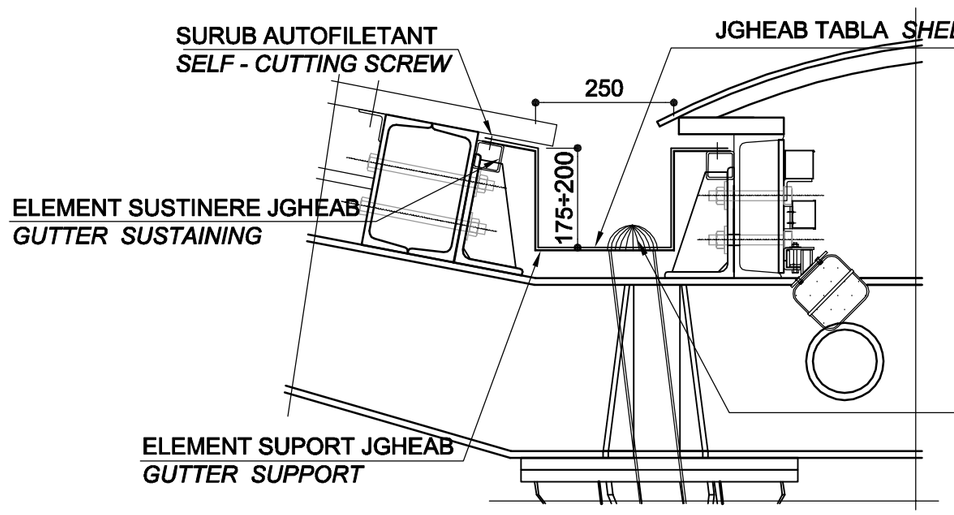

DETALIU JGHEAB sc. 1 : 10

GUTTER DETAIL *sc. 1 : 10*

MATERIALE
Laminate : S235J2G3 (OL 37.2n)

MATERIALS
Laminated : S235J2G3 (OL 37.2n)

NOTA
Realizarea pantei de scurgere (2 ‰) in lungul jgheabului, se realizeaza prin ajustarea inaltimilor (175 ÷ 200mm) elementelor suport ale jgheabului.

NOTE
The discharge slope (2 ‰) along the gutter, will be made by adjusting the heights (175 ÷ 200mm) of the gutter suports.

LEGENDA
N.S.S. = cota nivel superior sina proiectat
C.S.S. = cota superioara stalp

LEGEND
R.U.L. = designed rail upper level = N.S.S.
C.S.S. = pole upper level

Indice Index	Data Date	Modificare Modification/Revision	Proiectant Designer	Aprobat Consultant Approved Consultant	Aprobat CFR Approved CFR
D					
C					
B					
A					

GUVERNUL ROMANIEI
ROMANIAN GOVERNMENT

PROIECT FINANŢAT DE UNIUNEA EUROPEANĂ
EUROPEAN UNION FINANCED PROJECT

CLIENT / CLIENT

C.N.C.F. "C.F.R." - S.A.

ITALFERR GRUPPO FERROVIE DELLO STATO *Joint Venture leader* — Scott Wilson — OBERMEYER PLANEN + BERATEN GmbH — TECNIC Consulting Engineers

CONSULTANT / CONSULTANT

			Data Date	Semnătură Signature
Aprobat Approved	Şef proiect Project manager	R. Liuzza	12.2011	
Aprobat Approved	Coordonator Secţiune 1 Section 1 Coordinator	C. Gambelli	12.2011	
Verificat Checked	Verificator Verifier	Giuseppe Fioravanti	12.2011	

SUBCONTRACTANT / SUBCONTRACTOR — AREA

Aprobat Approved	Responsabil Subconsultant Subconsultant Responsible	A.Stanciu - Dinulescu	12.2011	
Întocmit Elaborated	Proiectant Designer	ing. / eng. Tudor ALMALEH	12.2011	

Reabilitarea liniei de cale ferata Braşov - Simeria, parte componentă a coridorului IV Pan European, pentru circulaţia trenurilor cu viteza maximă de 160 km/h,
Tronsonul : Braşov - Sighişoara
Rehabilitation of the railway line Braşov - Simeria, component Part of the IV Pan-European Corridor, for the trains circulation with maximum speed of 160 km/h,
Section : Braşov - Sighişoara

Proiect/Project 2004/RO/16/P/PA/003
Faza / Phase: D.E. / E.D.

Denumire desen / Drawing Title :

COPERTINE - DETALIU JGHEAB
CANOPY - GUTTER DETAIL

Codificare / Codification System	Scara / Scale 1:25 , 1:10	LOT / LOT	Nr. / No 01 / 01
E A 5 1 0 1 E 0 0 B Z C C 0 0 0 3 0 0 1 1			

3A4 297 x 630 = 0.19 mp

PDF created with pdfFactory Pro trial version www.pdffactory.com