STALP CURENT TIP SC
CURRENT POLE TYPE SC

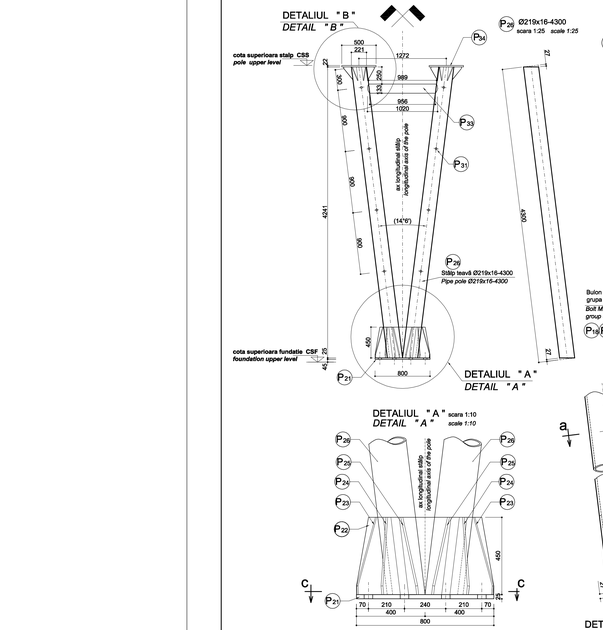

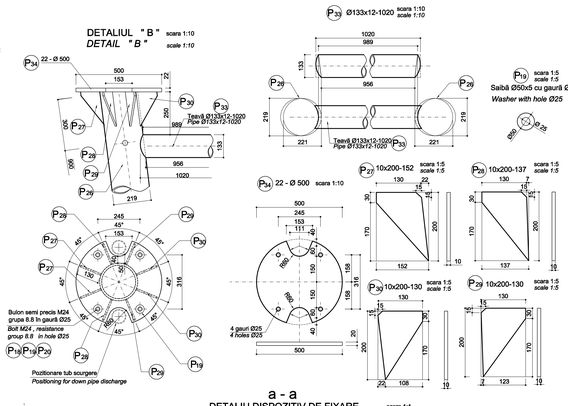

EXEMPLU MONTARE TUBURI DE SCURGERE PE STALP
MOUNTING EXAMPLE FOR DOWN PIPES ON THE POLE

scara 1:10
scale 1:10

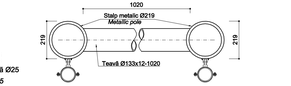

EXEMPLU MONTARE TUBURI DE SCURGERE SI CANALE DE CABLURI PE STALP
MOUNTIG EXAMPLE FOR DOWN PIPES AND CABLES CHANNELS ON THE POLE

scara 1:10
scale 1:10

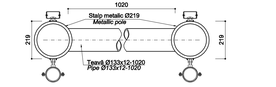

DETALIUL FIXARE CANAL DE CABLURI
ANCHORAGE DETAIL FOR CABLES CHANNELS

scara 1:1
scale 1:1

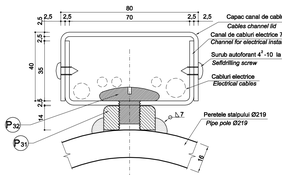

DETALIU FIXARE TUBURI FONTA MALEABILA
ANCHORAGE DETAIL FOR DOWN PIPE MALEABLE CAST IRON

scara 1:1
scale 1:1

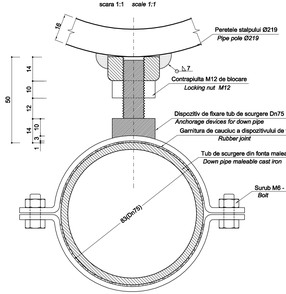

a - a
DETALIU DISPOZITIV DE FIXARE
(TUBURI DE SCURGERE SI / SAU CANALE DE CABLURI)
ANCHORAGE DEVICE DETAIL FOR
(DOWN PIPE AND / OR CABLES CHANNELS)

scara 1:1
scale 1:1

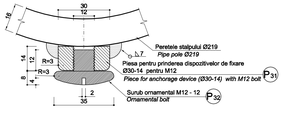

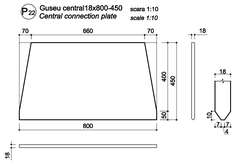

DETALIU PRELUCRARE MUCHIE GUSEU
(pentru sudura) scara 1:2

DETAIL FOR MACHINING THE BRACKETS EDGES
(for welding) scale 1:2

DETALIU PRELUCRARE MUCHIE GUSEU
(pentru sudura) scara 1:2

DETAIL FOR MACHINING THE BRACKETS EDGES
(for welding) scale 1:2

NOTA:

1. Nu se va incepe executia stalpilor metalici tip SC si ST decat dupa un releveu complet si exact al nivelului fetei superioare a fundatiilor stalpilor (CSF) , si a grinzilor peste tunel (CSG).
2. Stalpii curenti (SC) si cei pozitionati pe tunel (ST), vor avea acelasi nivel la partea superioara (CSS), masurat fata de NSS si linie adiacenta . Pentru reglarea de precizie pe verticala a nivelului este prevazut un strat de mortar de subturnare care poate avea o grosime de 30 ÷ 90 mm.
3. Avand in vedere numarul mare de elemente identice (stalpii) care trebuie executati, se va realiza cate un element prototip complet care va fi verificat si de inginer, dupa care se poate trece la productia de serie.
4. Acest plan sae va ca citi coreelat cu celelalte planuri ale copertinei si planurile corespondente de instalatii, electrice si telecomunicatii.
5. Se recomanda asamblarea de proba in uzina a grinzii transversale cu stalpul (buloane M24) inaintea livrarii.
6. Stalpii se vor inchide etans fata de patrunderea apei prin realizarea corecta si completa a sudurilor (care au si rol de etansare).
7. Confectitie metalice vor respecta conditiile de executie, montare si receptie precizate in Caietul de sarcini al lucrarii.
8. Protectia confectiilor metalice se realizeaza in sistem MC MIOZINC / MIOMASTIC / LUSTER conform Caietului de Sarcini si a specificatiilor tehnice ale producatorului.
9. Recomandam ca toate cele 3 straturi de protectie sa fi aplicate in uzina, (dupa asamblarea elementelor structurale se pot face pe santier doar mici corectii la stratul final).
10. Dupa receptia facuta in uzina nu se mai permite nici o interventie asupra elementelor - stalpi - de genul: gaurire, sudura, taiere, polizare, etc.
11. Pentru alinierea stâlpilor, găurile din placile de bază (P21) ale stâlpilor permit translatii în plan orizontal de ±10mm. fată de axa buloanelor de ancorare.
12. Buloanele de asamblare M24 grupa 8.8 dintre stalp si grinda transversala vor fi toate montate cu capul spre partea de jos.
13. Pentru transportul elementelor finite (stalpii), acestia se vor ambala in hartie cerata si se vor aseza pe suporti de lemn adecvati. Materialul marunt (suruburi, saibe, piulite, etc.) se va transporta in cutii de lemn.

NOTE:

1. The SC and ST metallic poles shall be carried out only after making a complete and exact survey of the foundations upper level (CSF) of pole foundations and beams over the tunnel (CSG).
2. The SC and ST poles , shall have the same upper level (CSS) measured from NSS. To make an accurate level adjustement at the upper part, an under-casting mortar layer was provided, whitch may be 30÷90 mm thick.
3. Considering the great number of similar elements (poles) that must be realised, one complete prototype of each element shall be carried out and shall be also checked by engineer, then they shall proceed to the series production.
4. This plan shall be read in correlation with the other structural drowings of the canopy and the affiend drawings for sanitary, electrical and telecommunications installations of the canopy.
5. A test assembling in the factory (with M24 blots) is recommended for the transversal beam and pole before delivery.
6. The poles shall be sealed to avoid the water penetration by correct and complete calk welding.
7. The steel elements shall comply with the manufacturing, mounting and reception conditions, stipulated in the "Technical Specifications for the Work".
8. The steel elements are protected by using MC MIOZINC/ MIOMASTIC/ LUSTER system as described in "Technical Specifications for the Work" and in the Manufacturer's Technical Specifications.
9. All the 3 protection layers shall be applied in the plant, (after assembling only small corections of the final layer can be made on site).
10. After the acceptance made in the plant, no intervention such as boring, welding, cutting, polishing etc. is allowed for the elements .
11. To place the poles on the same line, the holes in the base plates (P21) of the poles allow displacements in the horizontal plan of ±10mm. fatâ de axa buloanelor de ancorare.
12. The M24 connection bolts between the pole and the transversal beam will be all mounted head down.
13. Regarding the transport conditions, the elements (poles), will be packed in waxed paper and will be placed on adequate wood supports. The small pieces (screws, washers, nuts, etc.) will be transported in wood boxes.

MATERIALE

- Laminate : S275J2G3 (OL44.3n)
- Buloane M24 grupa 8.8
- Suruburi M12 grupa 5.6

MATERIALS

- ***Rolled elements: S275J2G3 (OL44.3n)***
- ***Bolts M24 resistance group 8.8***
- ***Bolts M12 resistance group 5.6***

SUDURI

Acolo unde nu exista alte precizari , sudurile se vor realiza cu
grosimea cordonului de sudura a = 0,7 t min
(unde t min = cea mai mica grosime a pieselor care se sudeaza)

WELDING

If there are no other specifications, the welding will have
the welding seam a = 0,7 t min
(where t min = the smallest thickness of pieces to be welded).

EXTRAS DE LAMINATE STALP CURENT SC pentru 1buc.
LAMINATED ELEMENTS TABLE CURRENT POLE SC for 1pcs.

Poz. *Position*	Denumirea *Denomination*	Dimensiuni *Dimensions* (mm)	Lungime *length* (mm)	Bucăţi *Pieces*	Greutate kg *Weight kg* /ml /m	/ buc. /pieces	TOTAL
P18	Bulon semipreciz Gr 8.8 *Bolt realstance group 8.8*	M24	100	8	-	0.454	3.64
P19	Saibă *Washer*	5x50-	-	8	-	0.06	0.48
P20	Piuliţă *Nut*	M24	-	16	-	0.0973	1.56
P21	Placă de bază *Base plate*	25x800-	700	1	157.00	109.90	109.90
P22	Guseu central *Central connection plate*	18x800-	450	1	113.04	50.87	50.87
P23	Guseu *Connection plate*	12x260-	450	4	24.50	11.03	44.10
P24	Guseu *Connection plate*	12x260-	450	4	24.50	11.03	44.10
P25	Guseu *Connection plate*	12x240-	450	4	22.14	9.97	39.85
P26	Stalp teavă *Pipe pole*	Ø219x16-	4300	2	80.10	344.43	688.86
P27	Guseu *Connection plate*	10x200-	152	4	15.70	2.39	9.56
P28	Guseu *Connection plate*	10x200-	137	4	15.70	2.15	8.60
P29	Guseu *Connection plate*	10x200-	130	4	15.70	2.05	8.20
P30	Guseu *Connection plate*	10x200-	130	4	15.70	2.05	8.20
P31	Piesă prindere *Anchorage piece*	Ø30-	14	16	5.55	0.08	1.28
P32	Surub ornamental *Ornamental bolt*	M12-	12	16	-	0.08	1.28
P33	Teavă (rigidizare) *Pipe (strengthening)*	Ø133x12-	1020	1	35.81	36.53	36.53
P34	Placă de asamblare *Assembly plate*	22 - Ø 500	-	2	-	33.91	67.82
	TOTAL LAMINATE *TOTAL LAMINATED ELEMENTS*						1124.83
	ELECTROZI + GRUND 3% *ELECTRODES + WELDING 3%*						34.17
	TOTAL kg. / 1buc. ***TOTAL kg. / 1pcs.***						1159,00

CENTRALIZATOR CONFECTII METALICE:
STALP CURENT TIP SC / STATIE
SUMMARY TABLE FOR METALLIC ELEMENTS :
CURRENT POLE TYPE SC / STATION

statia *station*	greutate : kg / buc. *weight : kg /pcs.*	nr. bucati / statie *no. pieces / station*	TOTAL Kg. *TOTAL Kg.*
BOD	1159,00	30	34770,00
FELDIOARA	1159,00	30	34770,00
APATA	1159,00	32	37088,00
RACOS	1159,00	30	34770,00
CATA	1159,00	30	34770,00
ARCHITA	1159,00	30	34770,00
VANATORI	1159,00	30	34770,00
ALBESTI	1159,00	30	34770,00

LEGENDA

N.S.S. = cota nivel superior sina proiectat
C.S.F. = cota superioara fundatie
C.F. = cota de fundare
C.S.S. = cota superioara stalp

LEGEND

R.U.L. = designed rail upper level = N.S.S.
C.S.F. = foundation upper level
C.F. = foundation level
C.S.S. = pole upper level

Indice *Index*	Data *Date*	Modificare *Modification/Revision*	Proiectant *Designer*	Aprobat Consultant *Approved Consultant*	Aprobat CFR *Approved CFR*
D					
C					
B					
A					

GUVERNUL ROMANIEI
ROMANIAN GOVERNMENT

PROIECT FINANŢAT DE UNIUNEA EUROPEANĂ
EUROPEAN UNION FINANCED PROJECT

CLIENT / CLIENT

C.N.C.F. "C.F.R." - S.A.

ITALFERR GRUPPO FERROVIE DELLO STATO *Joint Venture leader*
Scott Wilson
OBERMEYER PLANEN + BERATEN GmbH
TECNIC Consulting Engineers

CONSULTANT / CONSULTANT

			Data Date	Semn Bluţă Signature
Aprobat Approved	Şef proiect Project manager	R. Liuzza	12.2011	
Aprobat Approved	Coordonator Secţiune 1 Section 1 Coordinator	C. Gambelli	12.2011	
Verificat Checked	Verificator Verifier	Giuseppe Fioravanti	12.2011	

SUBCONTRACTANT / SUBCONTRACTOR

AMEX CARPATI

Aprobat Approved	Responsabil Subconsultant Subconsultant Responsible	A.Stanciu - Dinulescu	12.2011	
Întocmit Elaborated	Proiectant Designer	Ing. / eng. Tudor ALMALEEH	12.2011	

Reabilitarea liniei de cale ferata Braşov - Simeria, parte componentă a coridorului IV Pan European, pentru circulaţia trenurilor cu viteza maximă de 160 km/h,
Tronsonul : Braşov - Sighişoara
Rehabilitation of the railway line Braşov - Simeria, component Part of the IV Pan-European Corridor, for the trains circulation with maximum speed of 160 km/h,
Section : Braşov - Sighişoara

Proiect/Project 2004/RO/16/P/PA/003

Faza / Phase: D.E. / E.D.

Denumire desen / Drawing Title :

COPERTINE : STALP CURENT TIP SC - DETALII DE EXECUTIE
CANOPY : CURRENT POLE TYPE SC - DETAILS

Codificare / Codification System	Scara / Scale 1:25, 1:15, 1:5	LOT / LOT	Nr. / No. Dr / Dr.
E A 5 1 0 1 E 0 0 B Z C C 0 0 0 3 0 1 2			1

3 Ai (594x1155)=0,69 m²

PDF created with pdfFactory Pro trial version www.pdffactory.com