STALP PE TUNEL TIP ST2 (NIVEL PERON +0,38 NSS)
POLE ABOVE TUNNEL TYPE ST2 (PLATFORM LEVEL +0,38 NSS)

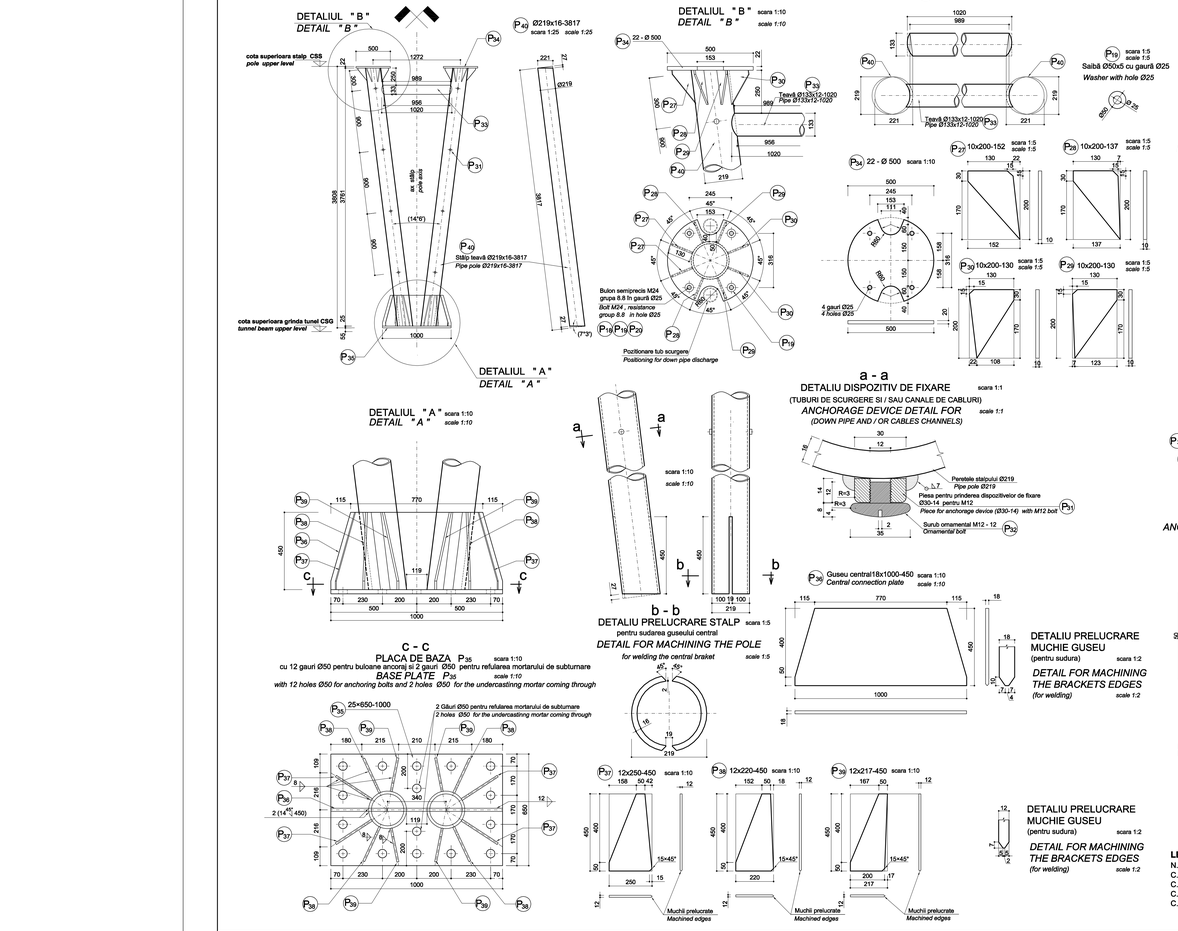

EXEMPLU MONTARE TUBURI DE SCURGERE PE STALP
MOUNTING EXAMPLE FOR DOWN PIPES ON THE POLE

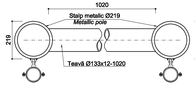

EXEMPLU MONTARE TUBURI DE SCURGERE SI CANALE DE CABLURI PE STALP
MOUNTIG EXAMPLE FOR DOWN PIPES AND CABLES CHANNELS ON THE POLE

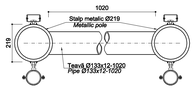

DETALIUL FIXARE CANAL DE CABLURI
ANCHORAGE DETAIL FOR CABLES CHANNELS

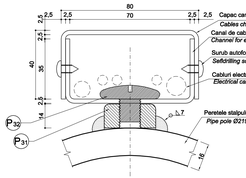

DETALIU FIXARE TUBURI FONTA MALEABILA
ANCHORAGE DETAIL FOR DOWN PIPE MALEABLE CAST IRON

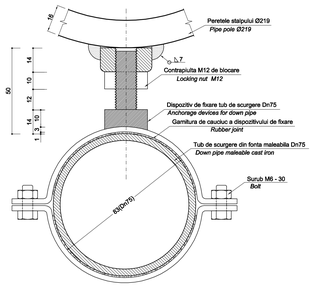

NOTA:

1. Nu se va incepe executia stalpilor metalici tip SC si ST decat dupa un releveu complet si exact al nivelului fetei superioare a fundatiilor stalpilor (CSF) , si a grinzilor peste tunel (CSG).
2. Stalpii pozitionati pe tunel (tip ST1, ST2) si cei curenti (tip SC), vor avea acelasi nivel la partea superioara (CSS), masurat fata de NSS al liniei adiascente . Pentru reglarea de precizie pe verticala a nivelului este prevazut un strat de mortar de subturnare care poate avea o grosime de 30 ÷ 90 mm.
3. Avand in vedere numarul mare de elemente identice (stalpi) care trebuie executati, se va realiza cate un element prototip complet care va fi verificat si de inginer, dupa care se poate trece la productia de serie.
4. Acest plan se va citi corelat cu celelalte planuri ale copertinei si planurile corespondente de instalatii, electrice si telecomunicatii.
5. Se recomanda asamblarea de proba in uzina a grinzii transversale cu stalpul (butoane M24) inaintea livrarii.
6. Stalpii se vor inchide etans fata de patrunderea apei prin realizarea corecta si completa a sudurilor (care au si rol de etansare).
7. Confectiile metalice vor respecta conditiile de executie, montare si receptie precizate in Caietul de sarcini al lucrarii.
8. Protectia confectiilor metalice se realizeaza in sistem MC MIOZINC / MIOMASTIC / LUSTER conform Caietului de Sarcini si a specificatiilor tehnice ale producatorului.
9. Recomandam ca toate cele 3 straturi de protectie sa fi aplicate in uzina, (dupa asamblarea elementelor structurale se pot face pe santier doar mici corectii la stratul final).
10. Dupa recepcia facuta in uzina nu se mai permite nici o interventie asupra elementelor - stalpi - de genul: gaurire, sudura, taiere, polizare, etc.
11. Pentru alinierea stâlpilor, gâurile din placile de bază ale stâlpilor permit translatii în plan orizontal de ±10mm. fată de axa buloanelor de ancorare.
12. Buloanele de asamblare M24 grupa 8.8 dintre stalp si grinda transversala vor fi toate montate cu capul spre partea de jos.
13. Pe stalpii la care nu se fac coborari de tubulatura, in pozitiile P31 (piesa de prindere), se vor insuruba doar pozitiile P32 (surub ornamental).
14. Pentru transportul elementelor finite (stalpi), acestia se vor ambala in hartie cerata si se vor aseza pe suporti de lemn adecvati. Materialul marunt (suruburi, saibe, piulite, etc.) se va transporta in cutii de lemn.

NOTE:

1. The SC and ST metallic poles shall be carried out only after making a complete and exact survey of the foundations upper level (CSF) of pole foundations and beams over the tunnel (CSG).
2. The type ST and SC poles , shall have the same upper level (CSS) measured from NSS. To make an accurate level adjustement at the upper part, an under-casting mortar layer was provided, whitch may be 30÷90 mm thick.
3. Considering the great number of similar elements (poles) that must be realised, one complete prototype of each element shall be carried out and shall be also checked by engineer, then they shall proceed to the series production.
4. This plan shall be read in correlation with the other structural drowings of the canopy and the afferent drawings for sanitary, electrical and telecommunications Installations of the canopy.
5. A test assembling in the factory (with M24 blots) is recommended for the transversal beam and pole before delivery.
6. The poles shall be sealed to avoid the water penetration by correct and complete calk welding.
7. The steel elements shall comply with the manufacturing, mounting and reception conditions, stipulated in the "Technical Specifications for the Work".
8. The steel elements are protected by using MC MIOZINC/ MIOMASTIC/ LUSTER system as described in "Technical Specifications for the Work" and in the Manufacturer's Technical Specifications.
9. All the 3 protection layers shall be applied in the plant, (after assembling only small corections of the final layer can be made on site).
10. After the acceptance made in the plant, no intervention such as boring, welding, cutting, polishing etc. is allowed for the elements .
11. To place the poles on the same line, the holes in the base plates of the poles allow displacements in the horizontal plan of ±10mm from the axis of the anchoring bolts.
12. The M24 connection bolts between the pole and the transversal beam will be all mounted head down.
13. For the poles on witch there are not descending tubing (down pipes and/or cables channels), in the positions P31 (anchorage piece) only the positions P32 will be screwed.
14. Regarding the transport conditions, the elements (poles), will be packed in waxed paper and will be placed on adequate wood supports. The small pieces (screws, washers, nuts, etc.) will be transported in wood boxes.

EXTRAS DE LAMINATE : STALP PE TUNEL TIP ST2 - pentru 1buc.
LAMINATED ELEMENTS TABLE : POLE ABOVE TUNNEL TYPE ST2 - 1pcs.

Poz. Position	Denumirea Denomination	Dimensiuni Dimensions (mm)	Lungime length (mm)	Bucăti /Pieces	Greutate kg Weight kg /ml /m	/ buc /pieces	TOTAL
P18	Bulon semiprecis Gr 8.8 Bolt resistance group 8.8	M24	100	8	-	0.454	3.64
P19	Saibă Washer	5x50-	-	8	-	0.06	0.48
P20	Piuliță Nut	M24	-	16	-	0.0973	1.56
P27	Guseu Connection plate	10x200-	152	4	15.70	2.39	9.56
P28	Guseu Connection plate	10x200-	137	4	15.70	2.15	8.60
P29	Guseu Connection plate	10x200-	130	4	15.70	2.05	8.20
P30	Guseu Connection plate	10x200-	130	4	15.70	2.05	8.20
P31	Piesă prindere Anchorage piece	Ø30-	14	16	5.55	0.08	1.28
P32	Surub ornamental Ornamental bolt	M12-	12	16	-	0.08	1.28
P33	Teavă (rigidizare) Pipe (stringhening)	Ø133x12-	1020	1	35.81	36.53	36.53
P34	Placă de asamblare Assembly plate	22 - Ø 500	-	2	-	33.91	67.82
P35	Placă de bază Base plate	25x1000-	650	1	196.25	127.57	127.57
P36	Guseu central Central connection plate	18x1000-	450	1	141.30	63.59	63.59
P37	Guseu Connection plate	12x250-	450	4	23.50	10.58	42.32
P38	Guseu Connection plate	12x220-	450	4	20.70	9.32	37.28
P39	Guseu Connection plate	12x217-	450	4	20.45	9.21	39.84
P40	Stalp teavă Pole pipe	Ø219x16-	3817	2	80.10	305.75	611.50
	TOTAL LAMINATE TOTAL LAMINATED ELEMENTS						1069.25
	ELECTRODZI + GRUND ELECTRODES + WELDING 3%						32.75
	TOTAL kg. / tbuc. TOTAL kg. / 1pcs.						1102,00

CENTRALIZATOR CONFECTII METALICE:
STALP PE TUNEL TIP ST2 / STATIE
SUMMARY TABLE FOR METALLIC ELEMENTS :
POLE ABOVE TUNNEL TYPE ST2 / STATION

statia station	greutate : kg / buc. weight : kg /pcs.	nr. bucati / statie no. pieces / station	TOTAL Kg. TOTAL Kg.
BOD	1102,00	2	2204,00
FELDIOARA	1102,00	3	3306,00
APATA	1102,00	1	1102,00
RACOS	1102,00	2	2204,00
CATA	1102,00	2	2204,00
ARCHITA	1102,00	2	2204,00
VANATORI	1102,00	2	2204,00
ALBESTI	1102,00	3	3306,00

LEGENDA

N.S.S. = cota nivel superior sina proiectat
C.S.F. = cota superioara fundatie
C.S.G. = cota superioara grinda tunel
C.F. = cota de fundare
C.S.S. = cota superioara stalp

LEGEND

R.U.L. = designed rail upper level = N.S.S.
C.S.F. = foundation upper level
C.S.G. = tunnel beam upper level
C.F. = foundation level
C.S.S. = pole upper level

MATERIALE

- Laminate : S275J2G3 (OL44.3n)
- Buloane M24 grupa 8.8
- Suruburi M12 grupa 5.6

MATERIALS

- Rolled elements: S275J2G3 (OL44.3n)
- Bolts M24 resistance group 8.8
- Bolts M12 resistance group 5.6

SUDURI

Acolo unde nu exista alte precizari , sudurile se vor realiza cu
grosimea cordonului de sudura a = 0,7 t min
(unde t min = cea mai mica grosime a pieselor care se sudeaza)

WELDING

If there are no other specifications, the welding will have
the welding seam a = 0,7 t min
(where t min = the smallest thickness of pieces to be welded).

Indice Index	Data Date	Modificare Modification/Revision	Proiectant Designer	Aprobat Consultant Approved Consultant	Aprobat CFR Approved CFR
D					
C					
B					
A					

GUVERNUL ROMANIEI
ROMANIAN GOVERNMENT

PROIECT FINANTAT DE UNIUNEA EUROPEANA
EUROPEAN UNION FINANCED PROJECT

CLIENT / CLIENT

C.N.C.F. "C.F.R." - S.A.

TALPERA GRUPPO ITERNENE DELLO STATO Joint Venture leader — Scott Wilson — OBERMEYER PLANEN + BERATEN GmbH — TECNIC Consulting Engineers

CONSULTANT / CONSULTANT

			Data Date	Semnătură Signature
Aprobat Approved	Şef proiect Project manager	R. Liuzza	12.2011	
Aprobat Approved	Coordonator Secţiune 1 Section 1 Coordinator	C. Gambelli	12.2011	
Verificat Checked	Verificator Verifier	Giuseppe Fioravanti	12.2011	

SUBCONTRACTANT / SUBCONTRACTOR

Aprobat Approved	Responsabil Subconsultant Subconsultant Responsible	A.Stanciu - Dinulescu	12.2011	
Întocmit Elaborated	Proiectant Designer	Ing. / eng. Tudor ALMALEH	12.2011	

Reabilitarea liniei de cale ferata Brasov - Simeria, parte componentă a coridorului IV Pan European, pentru circulaţia trenurilor cu viteza maximă de 160 km/h,
Tronsonul : Braşov - Sighişoara
Rehabilitation of the railway line Brasov - Simeria, component Part of the IV Pan-European Corridor, for the trains circulation with maximum speed of 160 km/h,
Section : Braşov - Sighişoara

Proiect/Project
2004/RO/16/P/PA/003
Faza / Phase:
D.E. / E.D.

Denumire desen / Drawing Title :

COPERTINE: STALP PE TUNEL TIP ST2 (PERON + 0,38NSS) - DETALII DE EXECUTIE
CANOPY : POLE ABOVE TUNNEL TYPE ST2 (PLATFORM LEVEL + 0,38NSS) - DETAILS

Codificare / Codification System	Scara / Scale 1:25, 1:10, 1:5, 1:2, 1:1	LOT / LOT	Nr. / No. 01 / 01
E A 5 1 0 1 E 0 0 B Z C C 0 0 0 3 0 1 4 1			

2% A2 (594x1155)=0,69 m²

PDF created with pdfFactory Pro trial version www.pdffactory.com