PLAN FUNDATIE IUP 25 kV si CALE de RULARE
25 kV IUP FOUNDATION AND ROLLING TRACK PLAN

sc. 1 : 20

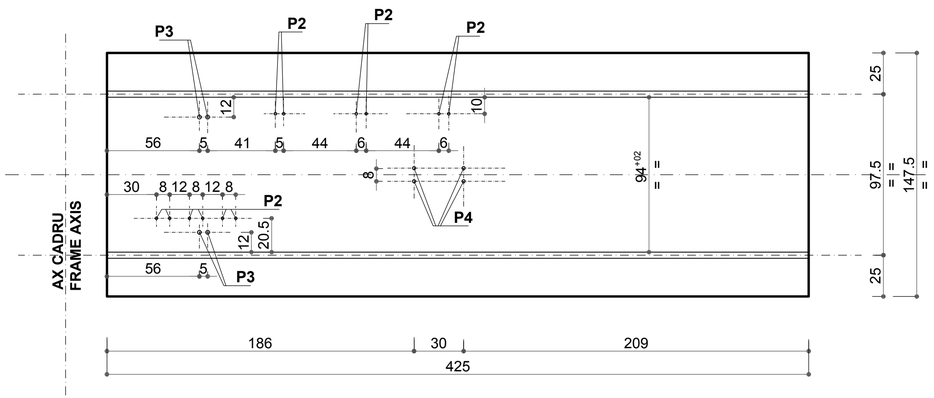

SECTIUNEA - SECTION B - B

sc. 1 : 20

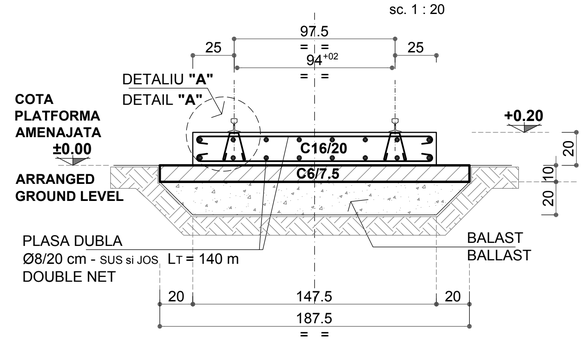

EXTRAS MATERIAL METALIC
TABLE of METALLIC MATERIAL

POZ.	DENUMIRE NAME	MATERIAL	DIMENS.	NR.BUC No. of PCS.	S.T.A.S.
P1	SINA de CALE FERATA RAIL FOR TRACK	-	tip / type 13.75	2	3014-52
P2	SURUB de FUNDATIE FOUNDATION SCREW	OL 38	M8x140	12	2361-64
P3	SURUB de FUNDATIE FOUNDATION SCREW	OL 38	M12x125	4	2350-64
P4	SURUB de FUNDATIE FOUNDATION SCREW	OL 38	M10x160	4	2531-64

AMPLASARE BULOANE de FUNDATIE - VEDERE A - A
LOCATION OF FOUNDATION BOLTS - VIEW A - A

sc. 1 : 5

- COTE in MM.- LEVELS in MM.-

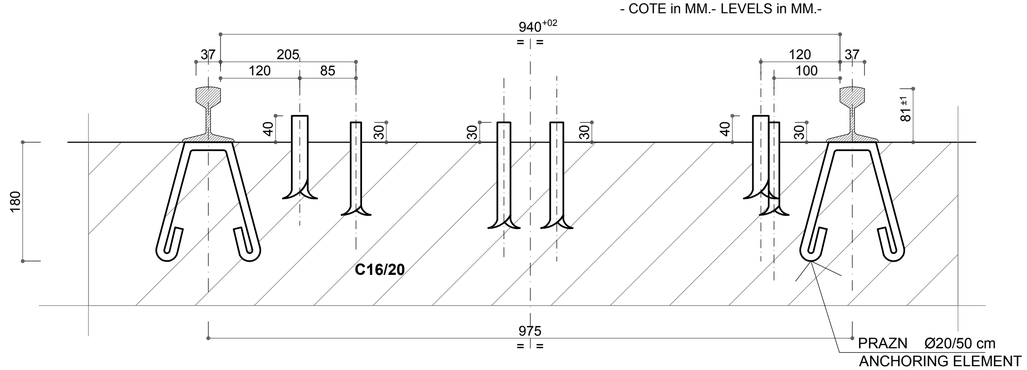

DETALIUL - DETAIL "A"

sc. 1 : 10

- COTE in MM.- LEVELS in MM.-

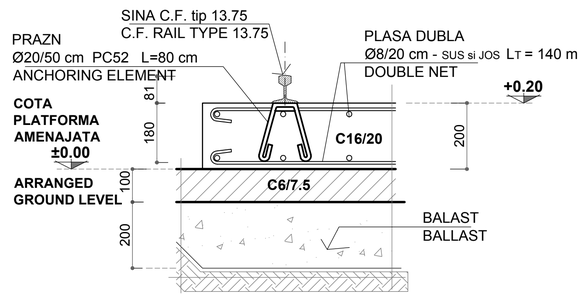

NOTA - NOTE

- SAPATURA SE VA EXECUTA LA DIMENSIUNILE INDICATE IN PLAN, FARA TREPTE SAU LARGIREA FUNDATIEI.
  THE EXCAVATION WIIL BE CARRIED OUT ACCORDING TO THE DIMENSIONS IN PLAN WITHOUT STEPS OR FOUNDATION EXTENSION.
- FUNDATIILE SE VOR TURNA PE VIU - FARA COFRAJ - IMEDIAT DUPA TERMINAREA SAPATURILOR.
  THE FOUNDATIONS WILL BE CAST IN PLACE WITHOUT SHUTTERING IMMEDIATELY AFTER THE EXCAVATIONS.

ARMATURA - REINFORCEMENT

OB37 Ø 8 = 60.0 kg

PC52 Ø20 = 20.0 kg

BETON SIMPLU - PLAIN CONCRETE :
C6 / 7.5 (T3/T4 - II 32.5 R/0 - 16)

BETON ARMAT - REINFORCED CONCRETE :
C16 / 20 (T3/T4 - II 32.5 R/0 - 16)

OTEL BETON - STRUCTURAL STEEL :
OB37 , PC52

Indice Index	Data Date	Modificare Modification/Revision	Proiectant Designer	Aprobat Consultant Approved Consultant	Aprobat CFR Approved CFR
D					
C					
B					
A					

GUVERNUL ROMANIEI
ROMANIAN GOVERNMENT

PROIECT FINANŢAT DE UNIUNEA EUROPEANĂ
EUROPEAN UNION FINANCED PROJECT

CLIENT / CLIENT

C.N.C.F. "C.F.R." - S.A.

ITALFERR GRUPPO FERROVIE DELLO STATO Joint Venture leader
Scott Wilson
OBERMEYER PLANEN + BERATEN GmbH
TECNIC Consulting Engineers

CONSULTANT / CONSULTANT

			Data Date	Semnătură Signature
Aprobat Approved	Şef proiect Project manager	R. Liuzza	12.2011	
Aprobat Approved	Coordonator Secţiune 1 Section 1 Coordinator	C. Gambelli	12.2011	
Verificat Checked	Verificator Verifier	Giuseppe Fioravanti	12.2011	

SUBCONTRACTANT / SUBCONTRACTOR

AREX BUDAPEST

Aprobat Approved	Responsabil Subconsultant Subconsultant Responsible	A.Stanciu - Dinulescu	12.2011	
Întocmit Elaborated	Proiectant Designer	Georgescu Toma Cristian	12.2011	

Reabilitarea liniei de cale ferata Braşov - Simeria, parte componentă a coridorului IV Pan European, pentru circulaţia trenurilor cu viteza maximă de 160 km/h,
Tronsonul : Braşov - Sighişoara
Rehabilitation of the railway line Braşov - Simeria, component Part of the IV Pan-European Corridor, for the trains circulation with maximum speed of 160 km/h,
Section : Braşov - Sighişoara

Proiect/Project
2004/RO/16/P/PA/003

Faza / Phase:
D.E. / E.D.

Denumire desen / Drawing Title :
SUBSTATIE TRACTIUNE - CONSTRUCTII EXTERIOARE - TRACTION SUBSTATION - OUTDOOR CONSTRUCTION

FUNDATIE IUP 25 kV si CALE de RULARE
ROLLING TRACK AND IUP FOUNDATION

Codificare / Codification System	Scara / Scale 1: 20	LOT / LOT	Nr. / No 01 / 01
E A 5 1 0 1 E 0 0 B C A C 0 0 0 4 0 0 4 0			

th.1 G. SAVULESCU

2 ½ A3 420x742 = 0.32 mp