D					
C					
B					
A					
Indice Index	Data Date	Modificare Modification/Revision	Proiectant Designer	Aprobat Consultant Approved Consultant	Aprobat CFR Approved CFR

GUVERNUL ROMANIEI
ROMANIAN GOVERNMENT

PROIECT FINANȚAT DE UNIUNEA EUROPEANĂ
EUROPEAN UNION FINANCED PROJECT

CLIENT / CLIENT

C.N.C.F. "C.F.R." - S.A.

ITALFERR
GRUPPO FERROVIE DELLO STATO
Joint Venture leader

Scott Wilson

OBERMEYER
PLANEN + BERATEN GmbH

TECNIC
Consulting Engineers

CONSULTANT / CONSULTANT

			Data Date	Semnături Signature
Aprobat Approved	Şef proiect Project manager	R. Liuzza	12.12.2011	
Aprobat Approved	Coordonator Secțiune 1 Section 1 Coordinator	C. Gambelli	12.12.2011	
Verificat Checked	Expert Cheie Key Expert	P. Amodio	12.12.2011	

SUBCONTRACTANT / SUBCONTRACTOR

AREX COMPANY

Aprobat Approved	Responsabil Subconsultant Subconsultant Responsible	A. Stanciu - Dinulescu	12.12.2011	
Întocmit Elaborated	Proiectant Designer	ing. Juganaru Adriana	12.12.2011	

Reabilitarea liniei de cale ferata Braşov - Simeria, parte componentă a coridorului IV Pan European, pentru circulația trenurilor cu viteza maximă de 160 km/h,
Tronsonul : Braşov - Sighişoara
Rehabilitation of the railway line Braşov - Simeria, component Part of the IV Pan-European Corridor, for the trains circulation with maximum speed of 160 km/h,
Section : Braşov - Sighişoara

Proiect/Project
2004/RO/16/P/PA/003

Faza / Phase:
D.D. / E.D.

Denumire desen / Drawing Title :

Statia / Station RACOS
Diagrame de cablaj pentru retele cabluri macazuri
Cable wiring diagrams for point machines

Codificare / Codification System	Scara / Scale Fără / No scale	LOT / LOT	Nr. / No 01 / 09
E A 5 1 0 1 E 1 1 B X S E 0 1 1 2 0 0 1 1			

LEGENDA
SYMBOLS

PC	Post Central Central Station
DSP	Detector suplimentar de pozitie Additional point detector
—	Cablu flexibil de legatura intre EM si cutia de conexiune Flexible cable linking the point machine and the connection box
CI–28C 1	Cutie aparataj pentru electromecanism de macaz Point machine connection box
DM1	Distribuitor de cabluri Distribution box no 1

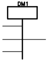

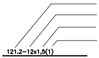
121.2–12x1,5(1)

Numarul cablului/Cable no.
Numar de conductoare/Total number of conductors in cable
Sectiunea conductorului/Conductor section
Conductor de rezerva/Spare conductor(s)

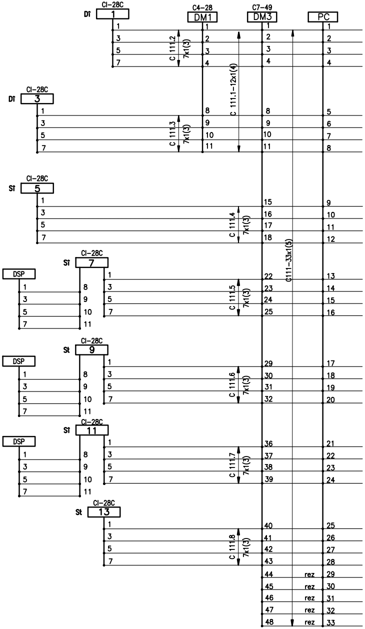
Cl-28C
Dî
1
C4-28
DM1
C7-49
DM3
PC
C 111.2
7x1(3)
C 111.1-12x1(4)
Cl-28C
Dî
3
C 111.3
7x1(3)
Cl-28C
St
5
C 111.4
7x1(3)
C111-33x1(3)
Cl-28C
St
7
DSP
C 111.5
7x1(3)
Cl-28C
St
9
DSP
C 111.6
7x1(3)
Cl-28C
St
11
DSP
C 111.7
7x1(3)
Cl-28C
St
13
C 111.8
7x1(3)
rez
rez
rez
rez
rez

Cablul 111

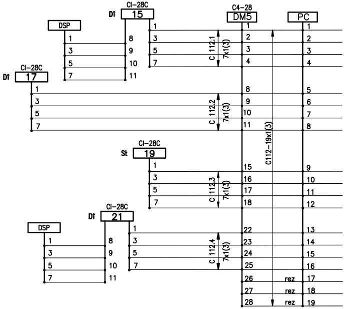
Cl-28C
Dî
15
DSP
C4-28
DM5
PC
C 112.1
7x1(3)
Cl-28C
Dî
17
C 112.2
7x1(3)
C112-19x1(3)
Cl-28C
St
19
C 112.3
7x1(3)
Cl-28C
Dî
21
DSP
C 112.4
7x1(3)
rez
rez
rez

Cablul 112

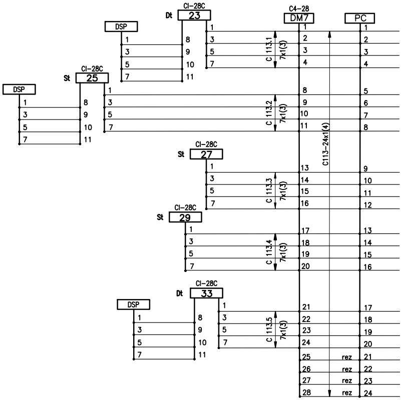
Cl-28C
Dt 23
DSP
C4-28
DM7
PC
C 113.1 7x1(3)
Cl-28C
St 25
DSP
C 113.2 7x1(3)
C113-24x1(4)
Cl-28C
St 27
C 113.3 7x1(3)
Cl-28C
St 29
C 113.4 7x1(3)
Cl-28C
Dt 33
DSP
C 113.5 7x1(3)
rez
rez
rez
rez

Cablul 113

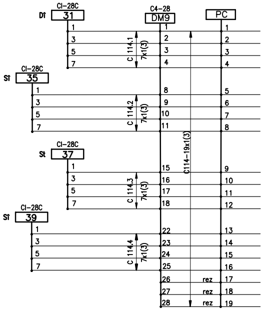
Cl-28C
Dt 31
C4-28
DM9
PC
C 114.1 7x1(3)
Cl-28C
St 35
C 114.2 7x1(3)
C114-19x1(3)
Cl-28C
St 37
C 114.3 7x1(3)
Cl-28C
St 39
C 114.4 7x1(3)
rez
rez
rez

Cablul 114

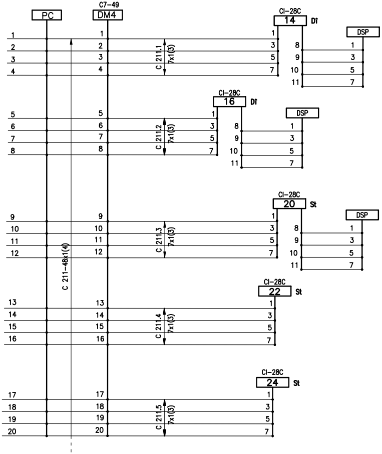
PC
C7-49
DM4
CI-28C
14
Dt
DSP
C 211.1
7x1(3)
CI-28C
16
Dt
DSP
C 211.2
7x1(3)
CI-28C
20
St
DSP
C 211.3
7x1(3)
C 211-48x1(4)
CI-28C
22
St
C 211.4
7x1(3)
CI-28C
24
St
C 211.5
7x1(3)

Cablul 211

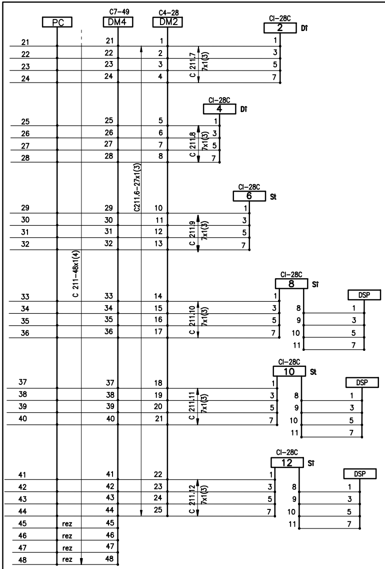
PC
C7-49
DM4
C4-28
DM2
CI-28C
2
Dt
C 211.7
7x1(3)
CI-28C
4
Dt
C 211.8
7x1(3)
C211.6-27x1(3)
CI-28C
6
St
C 211.9
7x1(3)
C 211-48x1(4)
CI-28C
8
St
DSP
C 211.10
7x1(3)
CI-28C
10
St
DSP
C 211.11
7x1(3)
CI-28C
12
St
DSP
C 211.12
7x1(3)
rez
rez
rez
rez

Cablul 211

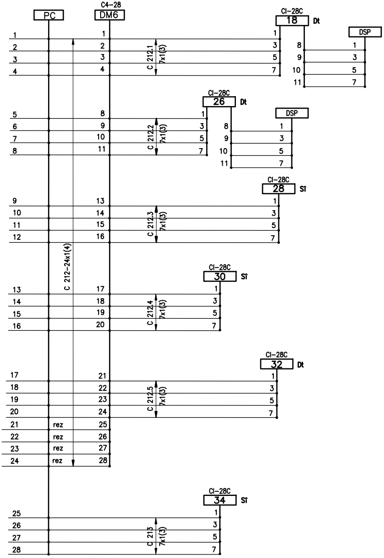
PC
C4-28
DM6
1
2
3
4
CI-28C
18
Dt
DSP
C 212.1
7x1(3)
8
9
10
11
5
6
7
8
CI-28C
26
Dt
DSP
C 212.2
7x1(3)
9
10
11
12
13
14
15
16
CI-28C
28
St
C 212.3
7x1(3)
C 212-24x1(4)
17
18
19
20
CI-28C
30
St
C 212.4
7x1(3)
21
22
23
24
CI-28C
32
Dt
C 212.5
7x1(3)
rez
rez
rez
rez
25
26
27
28
CI-28C
34
St
C 213
7x1(3)

Cablul 212,213