NOTA: Acest desen nu constituie o obligatie de aplicare de către contractor.
El reprezintă doar un exemplu de circuit de cale utilizat la CFR si nu trebuie aplicat ca atare.

NOTE: It is not compulsory for the contractor to apply this drawing.
It is only an example of track circuit in use at CFR and shall not be applied as such.

Indice Index	Data Date	Modificare Modification/Revision	Proiectant Designer	Aprobat Consultant Approved Consultant	Aprobat CFR Approved CFR
D					
C					
B					
A					

GUVERNUL ROMANIEI
ROMANIAN GOVERNMENT

PROIECT FINANȚAT DE UNIUNEA EUROPEANĂ
EUROPEAN UNION FINANCED PROJECT

CLIENT / CLIENT

C.N.C.F. "C.F.R." - S.A.

ITALFERR
GRUPPO FERROVIE DELLO STATO
Joint Venture leader

Scott Wilson

OBERMEYER
PLANEN + BERATEN GmbH

TECNIC
Consulting Engineers

CONSULTANT / CONSULTANT

			Data Date	Semnătură Signature
Aprobat Approved	Şef proiect Project manager	R. Liuzza	12.12.2011	
Aprobat Approved	Coordonator Secţiune 1 Section 1 Coordinator	C. Gambelli	12.12.2011	
Verificat Checked	Expert Cheie Key Expert	P. Amodio	12.12.2011	

SUBCONTRACTANT / SUBCONTRACTOR

ArEX

Aprobat Approved	Responsabil Subconsultant Subconsultant Responsible	A. Stanciu - Dinulescu	12.12.2011	
Întocmit Elaborated	Proiectant Designer	ing. Juganaru Adriana	12.12.2011	

Reabilitarea liniei de cale ferata Brasov - Simeria, parte componentă a coridorului IV Pan European, pentru circulaţia trenurilor cu viteza maximă de 160 km/h, Tronsonul : Brasov - Sighisoara

Rehabilitation of the railway line Brasov - Simeria, component Part of the IV Pan-European Corridor, for the trains circulation with maximum speed of 160 km/h, Section : Brasov - Sighisoara

Proiect/Project
2004/RO/16/P/PA/003

Faza / Phase:
D.E. / D.D.

Denumire desen / Drawing Title :

Statia / Station RACOS
Fisele de montaj rama alimentare in secvente a circuitelor de cale
Wiring diagrams for track circuits sequence-supply frame

Codificare / Codification System	Scara / Scale Fără / No scale	LOT / LOT	Nr. / No 01 / 10
E A 5 1 0 1 E 1 1 B X S E 0 1 1 2 0 1 2 1			

420x297=0.125mp

RAMA G

	1	2	3	4	5	6	7	8	9
8		NF1L-400 ASA4 A1	NF1L-400 ASA4 A3	NF1L-400 ASA4 A5	NF1L-400 ASA4 A7	NF1L-400 ASA4 A2	NF1L-400 ASA4 A4	NF1L-400 ASA4 A6	NF1L-400 ASA4 A8
7		NF1-2000 ASA5 VS1-3	NF1-2000 VS1-4	NF1-2000 ASA5 VS2-4	NF1-2000 VS2-1	NF1-2000 ASA5 VS3-1	NF1-2000 VS3-2	NF1-2000 ASA5 VS4-2	NF1-2000 VS4-3
6	2x0,5A	PIC-1 VS1B-CI	VS1B-BD	PIC-1 VS2B-CI	VS2B-BD	PIC-1 VS3B-CI	VS3B-BD	PIC-1 VS4B-CI	VS4B-BD
5	4x0,5A	PIC-1 VS1A-CI	VS1A-BD	PIC-1 VS2A-CI	VS2A-BD	PIC-1 VS3A-CI	VS3A-BD	PIC-1 VS4A-CI	VS4A-BD

	1	2	3	4	5	6	7
4				GENERATOR IMPULSURI DE SINCRONIZARE Y2-4			
3	1µF/400Vca+47Ω RC-31X		1µF/400Vca+47Ω RC-32X		1µF/400Vca+47Ω RC-41Y		1µF/400Vca+47Ω RC-42Y
		CONTACTOR STATIC FARA PROTECTIE CS-3X				CONTACTOR STATIC FARA PROTECTIE CS-4Y	
2	1µF/400Vca+47Ω RC-11X		1µF/400Vca+47Ω RC-12X		1µF/400Vca+47Ω RC-21Y		1µF/400Vca+47Ω RC-22Y
		CONTACTOR STATIC FARA PROTECTIE CS-1X		EMITATOR CENTRAL		CONTACTOR STATIC FARA PROTECTIE CS-2Y	
1				GENERATOR IMPULSURI DE SINCRONIZARE X1-3			

	1	2	3	4	5	6	7	8	9
0	4x0,5A Sincronizare BLA-X (S1,S3)	2x5A 2x0,5A ALIMENTARE EMITATOR CENTRAL	4x0,5A Sincronizare BLA-Y (S2,S4)	2x5A Alim.Rame(FI)	4x0,5A Comanda secvente (S1,S2)	4x0,5A Comanda secvente (S3,S4)	4x0,5A Sincronizare STATIE+BLA	4x5A SECV. X	4x5A SECV. Y

420x297=0.125mp

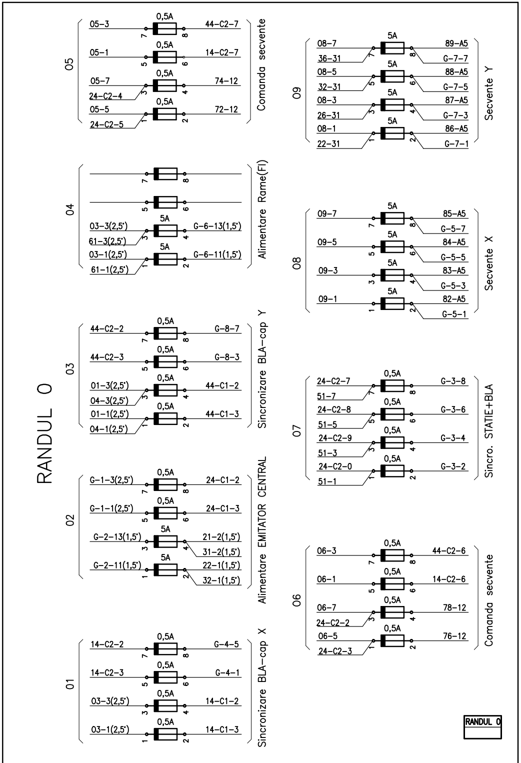
RANDUL 0
05 Comanda secvente
05-3 0,5A 44-C2-7
05-1 0,5A 14-C2-7
05-7 24-C2-4 0,5A 74-12
05-5 24-C2-5 0,5A 72-12
04 Alimentare Rame(FI)
03-3(2,5') 61-3(2,5') 5A G-6-13(1,5')
03-1(2,5') 61-1(2,5') 5A G-6-11(1,5')
03 Sincronizare BLA-cap Y
44-C2-2 0,5A G-8-7
44-C2-3 0,5A G-8-3
01-3(2,5') 04-3(2,5') 0,5A 44-C1-2
01-1(2,5') 04-1(2,5') 0,5A 44-C1-3
02 Alimentare EMITATOR CENTRAL
G-1-3(2,5') 0,5A 24-C1-2
G-1-1(2,5') 0,5A 24-C1-3
G-2-13(1,5') 5A 21-2(1,5') 31-2(1,5')
G-2-11(1,5') 5A 22-1(1,5') 32-1(1,5')
01 Sincronizare BLA-cap X
14-C2-2 0,5A G-4-5
14-C2-3 0,5A G-4-1
03-3(2,5') 0,5A 14-C1-2
03-1(2,5') 0,5A 14-C1-3
09 Secvente Y
08-7 36-31 5A 89-A5 G-7-7
08-5 32-31 5A 88-A5 G-7-5
08-3 26-31 5A 87-A5 G-7-3
08-1 22-31 5A 86-A5 G-7-1
08 Secvente X
09-7 5A 85-A5 G-5-7
09-5 5A 84-A5 G-5-5
09-3 5A 83-A5 G-5-3
09-1 5A 82-A5 G-5-1
07 Sincro. STATIE+BLA
24-C2-7 51-7 0,5A G-3-8
24-C2-8 51-5 0,5A G-3-6
24-C2-9 51-3 0,5A G-3-4
24-C2-0 51-1 0,5A G-3-2
06 Comanda secvente
06-3 0,5A 44-C2-6
06-1 0,5A 14-C2-6
06-7 24-C2-2 0,5A 78-12
06-5 24-C2-3 0,5A 76-12
RANDUL 0

Statia:RACOS

EA51 01 E 11 BX SE 011 2 012 1 3/10

420x297=0.125mp

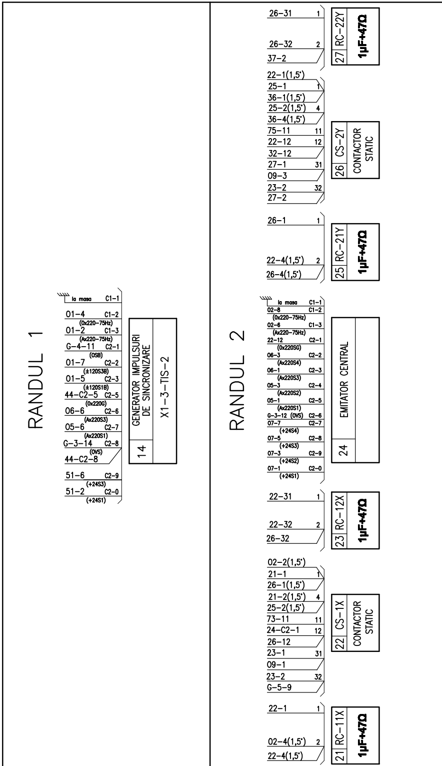
RANDUL 1
14 GENERATOR IMPULSURI DE SINCRONIZARE X1-3-TIS-2
la masa C1-1
01-4 C1-2
01-2 C1-3
G-4-11 C2-1
01-7 C2-2
01-5 C2-3
44-C2-5 C2-5
06-6 C2-6
05-6 C2-7
G-3-14 C2-8
44-C2-8
51-6 C2-9
51-2 C2-0
RANDUL 2
27 RC-22Y 1µF+47Ω
26-31 26-32 37-2
26 CS-2Y CONTACTOR STATIC
22-1(1,5') 25-1 36-1(1,5') 25-2(1,5') 36-4(1,5') 75-11 22-12 32-12 27-1 09-3 23-2 27-2
25 RC-21Y 1µF+47Ω
26-1 22-4(1,5') 26-4(1,5')
24 EMITATOR CENTRAL
la masa C1-1
23 RC-12X 1µF+47Ω
22-31 22-32 26-32
22 CS-1X CONTACTOR STATIC
02-2(1,5') 21-1 26-1(1,5') 21-2(1,5') 25-2(1,5') 73-11 24-C2-1 26-12 23-1 09-1 23-2 G-5-9
21 RC-11X 1µF+47Ω
22-1 02-4(1,5') 22-4(1,5')

Statia:RACOS

EA51 01 E 11 BX SE 011 2

420x297=0.125mp

1+2

RANDUL 3

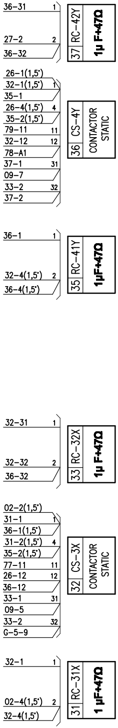
36-31 1
27-2 2
36-32
37 RC-42Y
1µ F+47Ω
26-1(1,5')
32-1(1,5') 1
35-1
26-4(1,5') 4
35-2(1,5')
79-11 11
32-12 12
78-A1
37-1 31
09-7
33-2 32
37-2
36 CS-4Y
CONTACTOR STATIC
36-1 1
32-4(1,5') 2
36-4(1,5')
35 RC-41Y
1µF+47Ω
32-31 1
32-32 2
36-32
33 RC-32X
1µ F+47Ω
02-2(1,5')
31-1 1
36-1(1,5')
31-2(1,5') 4
35-2(1,5')
77-11 11
26-12 12
36-12
33-1 31
09-5
33-2 32
G-5-9
32 CS-3X
CONTACTOR STATIC
32-1 1
02-4(1,5') 2
32-4(1,5')
31 RC-31X
1 µF+47Ω

RANDUL 4

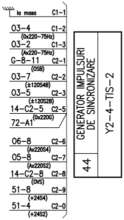
la masa C1-1
03-4 C1-2
(0x220-75Hz)
03-2 C1-3
(Ax220-75Hz)
G-8-11 C2-1
(OSB)
03-7 C2-2
(±120S4B)
03-5 C2-3
(±120S2B)
14-C2-5 C2-5
72-A1 (0x220G)
06-8 C2-6
(Ax220S4)
05-8 C2-7
(Ax220S2)
14-C2-8 C2-8
(OVS)
51-8 C2-9
(+24S4)
51-4 C2-0
(+24S2)
GENERATOR IMPULSURI DE SINCRONIZARE
44
Y2-4-TIS-2

3+4

RANDUL 6

69		68		67		66		65		
	VS4B-BD		VS4B-CI		VS3B-BD		VS3B-CI		VS2B-BD	
12	0x220			12	0x220			12	0x220	
11	79-1	11	58-11 78-A12	11	77-1	11	56-11 76-A12	11	75-1	11
		13	OVS			13	OVS			13
32	8-33			32	6-33			32	4-33	
31	8-53			31	6-53			31	4-53	
		33	9-32			33	7-32			33
52	+24S3			52	+24S2			52	+24S1	
51	Ax220			51	Ax220			51	Ax220	
		53	9-31			53	7-31			53
72	OVS			72	OVS			72	OVS	
71	79-4	71	58-71 78-A11	71	77-4	71	56-71 76-A11	71	75-4	71

RANDUL 5

59		58		57		56		55		
	VS4A-BD		VS4A-CI		VS3A-BD		VS3A-CI		VS2A-BD	
12	0x220			12	0x220			12	0x220	
11	78-1	11	68-11	11	76-1	11	66-11	11	74-1	11
		13	OVS			13	OVS			13
32	8-33			32	6-33			32	4-33	
31	8-53			31	6-53			31	4-53	
		33	9-32			33	7-32			33
52	+24S2			52	+24S1			52	+24S4	
51	Ax220			51	Ax220			51	Ax220	
		53	9-31			53	7-31			53
72	OVS			72	OVS			72	OVS	
71	78-4	71	68-71	71	76-4	71	66-71	71	74-4	71

64		63		62		61
VS2B-CI		VS1B-BD		VS1B-CI		2x0,5A
	12	**0x220**			1	04-1(2,5') G-1-1(2,5')
54-11 74-A12	11	73-1	11	52-11 72-A12	2	53-51 63-51
OVS			13	**OVS**	3	04-3(2,5') G-1-3(2,5')
	32	2-33			4	53-12 63-12
	31	2-53				
5-32			33	3-32		
	52	**+24S4**				
	51	**Ax220**				
5-31			53	3-31		
	72	**OVS**				
54-71 74-A11	71	73-4	71	52-71 72-A11		

54		53		52		51
VS2A-CI		VS1A-BD		VS1A-CI		4x0,5A
	12	**0x220**			1	07-1
64-11	11	72-1	11	62-11	2	14-C2-0
OVS			13	**OVS**	3	07-3
	32	2-33			4	44-C2-0
	31	2-53			5	07-5
5-32			33	3-32	6	14-C2-9
	52	**+24S3**			7	07-7
	51	**Ax220**			8	44-C2-9
5-31			53	3-31		
	72	**OVS**				
64-71	71	72-4	71	62-71		

5+6

420x297=0.125mp

RANDUL 7

	9		8		7		6		5		4		3		2		1
Nr. crt.	VS4-3	Nr. crt.	VS4-2	Nr. crt.	VS3-2	Nr. crt.	VS3-1	Nr. crt.	VS2-1	Nr. crt.	VS2-4	Nr. crt.	VS1-4	Nr. crt.	VS1-3	Nr. crt.	
1	69-11	1	59-11	1	67-11	1	57-11	1	65-11	1	55-11	1	63-11	1	53-11		
2	3	2	3	2	3	2	3	2	3	2	3	2	3	2	3		
3	2	3	2	3	2	3	2	3	2	3	2	3	2	3	2		
4	69-71	4	59-71	4	67-71	4	57-71	4	65-71	4	55-71	4	63-71	4	53-71		
12	8-11	12	A3 06-4	12	6-11	12	A3 06-2	12	4-11	12	A3 05-4	12	2-11	12	A3 05-2		
11	36-11	11	9-12	11	32-11	11	7-12	11	26-11	11	5-12	11	22-11	11	3-12		
13		13		13		13		13		13		13		13			
22		22		22		22		22		22		22		22			
21		21		21		21		21		21		21		21			
23		23		23		23		23		23		23		23			
32		32		32		32		32		32		32		32			
31		31		31		31		31		31		31		31			
33		33		33		33		33		33		33		33			
42		42		42		42		42		42		42		42			
41		41		41		41		41		41		41		41			
43		43		43		43		43		43		43		43			
52		52		52		52		52		52		52		52			
51		51		51		51		51		51		51		51			
53		53		53		53		53		53		53		53			
62		62		62		62		62		62		62		62			
61		61		61				61		61		61		61			
63		63		63		63		63		63		63		63			
72		72		72		72		72		72		72		72			
71		71		71		71		71		71		71		71			
73		73		73		73		73		73		73		73			
82		82		82		82		82		82		82		82			
81		81		81		81		81		81		81		81			
83		83		83		83		83		83		83		83			
		A1	6-A1 36-12			A1	4-A1 8-A1			A1	2-A1 6-A1			A1	4-A1 44-C2-5		
		A3	12			A3	12			A3	12			A3	12		
		A11	68-71			A11	66-71			A11	64-71			A11	62-71		
		A12	68-11			A12	66-11			A12	64-11			A12	62-11		

7

Statia:RACOS

420x297=0.125mp

Sta

RANDUL 8

9		8		7		6		5		4		3		2		1	
Nr. crt.	A8	Nr. crt.	A6	Nr. crt.	A4	Nr. crt.	A2	Nr. crt.	A7	Nr. crt.	A5	Nr. crt.	A3	Nr. crt.	A1	Nr. crt.	
1	A13	1	A13	1	A13	1	A13	1	A13	1	A13	1	A13	1	A13		
2	3	2	3	2	3	2	3	2	3	2	3	2	3	2	3		
3	2	3	2	3	2	3	2	3	2	3	2	3	2	3	2		
4	A12	4	A12	4	A12	4	A12	4	A12	4	A12	4	A12	4	A12		
12		12		12		12		12		12		12		12			
11		11		11		11		11		11		11		11			
13		13		13		13		13		13		13		13			
22		22		22		22		22		22		22		22			
21		21		21		21		21		21		21		21			
23		23		23		23		23		23		23		23			
32	G-10-5	32	9-31	32	8-31	32	7-31	32	G-10-3	32	5-31	32	4-31	32	3-31		
31	8-32	31	7-32	31	6-32	31	2-31	31	4-32	31	3-32	31	2-32	31	6-31 G-10-1		
33		33		33		33		33		33		33		33			
42		42		42		42		42		42		42		42			
41		41		41		41		41		41		41		41			
43		43		43		43		43		43		43		43			
52		52		52		52		52		52		52		52			
51		51		51		51		51		51		51		51			
53		53		53		53		53		53		53		53			
62		62		62		62		62		62		62		62			
61		61		61		61		61		61		61		61			
63		63		63		63		63		63		63		63			
72		72		72		72		72		72		72		72			
71		71		71		71		71		71		71		71			
73		73		73		73		73		73		73		73			
82		82		82		82		82		82		82		82			
81		81		81		81		81		81		81		81			
83		83		83		83		83		83		83		83			
A1	8-A1 G-7-9	A1	7-A1 9-A1	A1	6-A1 8-A1	A1	5-A1 7-A1	A1	4-A1 6-A1	A1	3-A1 5-A1	A1	2-A1 4-A1	A1	3-A1		
A5	09-8	A5	09-6	A5	09-4	A5	09-2	A5	08-8	A5	08-6	A5	08-4	A5	08-2		
(+) A12	4	(+) A12	4	(+) A12	4	(+) A12	4	(+) A12	4	(+) A12	4	(+) A12	4	(+) A12	4		
(−) A13	1	(−) A13	1	(−) A13	1	(−) A13	1	(−) A13	1	(−) A13	1	(−) A13	1	(−) A13	1		
A6	A10	A6	A10	A6	A10	A6	A10	A6	A10	A6	A10	A6	A10	A6	A10		
A9	A11	A9	A11	A9	A11	A9	A11	A9	A11	A9	A11	A9	A11	A9	A11		

8

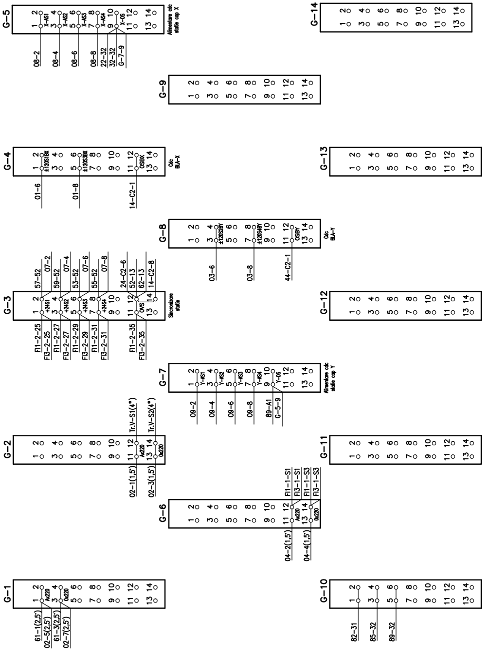
G-5
1 2 3 4 5 6 7 8 9 10 11 12 13 14
X-AS1
X-AS2
X-AS3
X-AS4
X-OS
Alimentare cdc statie cap X
08-2
08-4
08-6
08-8
22-32
32-32
G-7-9
G-14
G-9
G-4
±120S1BX
±120S3BX
OSBX
Cdc BLA-X
01-6
01-8
14-C2-1
G-13
G-8
±120S2BY
±120S4BY
OSBY
Cdc BLA-Y
03-6
03-8
44-C2-1
G-3
57-52
07-2
59-52
07-4
53-52
07-6
55-52
07-8
24-C2-6
52-13
62-13
14-C2-8
+24S1
+24S2
+24S3
+24S4
OVS
Sincronizare statie
Fl1-2-25
Fl3-2-25
Fl1-2-27
Fl3-2-27
Fl1-2-29
Fl3-2-29
Fl1-2-31
Fl3-2-31
Fl1-2-35
Fl3-2-35
G-12
G-7
Y-AS1
Y-AS2
Y-AS3
Y-AS4
Y-OS
Alimentare cdc statie cap Y
09-2
09-4
09-6
09-8
89-A1
G-5-9
G-2
Tr.V-S1(4")
Tr.V-S2(4")
Ax220
Ox220
02-1(1,5')
02-3(1,5')
G-11
G-6
Fl1-1-S1
Fl3-1-S1
Fl1-1-S3
Fl3-1-S3
Ax220
Ox220
04-2(1,5')
04-4(1,5')
G-1
Ax220
Ox220
61-1(2,5')
02-5(2,5')
61-3(2,5')
02-7(2,5')
G-10
82-31
85-32
89-32

BUCLE TENSIUNI

+24S1	+24S2	+24S3	+24S4	Ax220	0x220	0VS	0S	0S	0x220SG
G-3-2	G-3-4	G-3-6	G-3-8	61-2	61-4	G-3-12	G-5-9	G-7-9	24-C2-1
57-52	59-52	53-52	55-52	53-51	53-12	52-13	22-32	89-A1	22-12
65-52	67-52	69-52	63-52	55-51	55-12	53-72	23-2	88-A1	26-12
				57-51	57-12	54-13	26-32	87-A1	32-12
				59-51	59-12	55-72	27-2	86-A1	36-12
				69-51	69-12	56-13	37-2	85-A1	78-A1
				67-51	67-12	57-72	36-32	84-A1	76-A1
				65-51	65-12	58-13	33-2	83-A1	74-A1
				63-51	63-12	59-72	32-32	82-A1	72-A1
						69-72			44-C2-5
						68-13			14-C2-5
						67-72			
						66-13			
						65-72			
						64-13			
						63-72			
						62-13			
				61-2	61-4	G-3-12	G-5-9		