LEGENDA
SYMBOLS

EMT-N/T	Elctromecanism de macaz trifazat netalonabil/talonabil Nontrailable/trailable three phase point machine
DSP	Detector suplimentar de pozitie Additional point detector
— — —	Cablu flexibil de legatura intre EM si cutia de conexiune Flexible cable linking the point machine and the connection box
	Cutie aparataj pentru electromecanism de macaz Point machine connection box
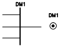 DM1 DM1	Distribuitor de cabluri Distribution box no 1
	Cap de cablu cu/fara impamantare Cable terminal with/without earth
	Legatura echipotentiala Equipotential connection
	Priza de pamant Earth terminal
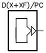 D(X+XF)/PC	Dulap semnal/Post centralizare Signal cabinet/Central post

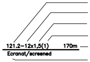
121.2–12x1,5(1)
170m
Ecranat/screened

Numarul cablului/Cable no.
Numar de conductoare/Total number of conductors in cable
Sectiunea conductorului/Conductor section
Conductor de rezerva/Spare conductor(s)
Lungimea cablului/Length of cable
Tipul cablului/Cable type

Daca tipul cablului nu este specificat
acesta va fi considerat neecranat.

If the cable type is not specified it
will be considered unscreened

D					
C					
B					
A					
Indice Index	Data Date	Modificare Modification/Revision	Proiectant Designer	Aprobat Consultant Approved Consultant	Aprobat CFR Approved CFR

GUVERNUL ROMANIEI
ROMANIAN GOVERNMENT

PROIECT FINANȚAT DE UNIUNEA EUROPEANĂ
EUROPEAN UNION FINANCED PROJECT

CFR

CLIENT / CLIENT

C.N.C.F. "C.F.R." - S.A.

ITALFERR
GRUPPO FERROVIE DELLO STATO
Joint Venture leader

Scott Wilson

OBERMEYER
PLANEN + BERATEN GmbH

TECNIC
Consulting Engineers

CONSULTANT / CONSULTANT

			Data Date	Semnătură Signature
Aprobat Approved	Șef proiect Project manager	R. Liuzza	12.12.2011	
Aprobat Approved	Coordonator Secțiune 1 Section 1 Coordinator	C. Gambelli	12.12.2011	
Verificat Checked	Expert Cheie Key Expert	P. Amodio	12.12.2011	

SUBCONTRACTANT / SUBCONTRACTOR

AREX COMPANY

Aprobat Approved	Responsabil Subconsultant Subconsultant Responsible	A. Stanciu - Dinulescu	12.12.2011	
Întocmit Elaborated	Proiectant Designer	Ing. Juganaru Adriana	12.12.2011	

Reabilitarea liniei de cale ferata Brașov - Simeria, parte componentă a coridorului IV Pan European, pentru circulația trenurilor cu viteza maximă de 160 km/h,
Tronsonul : Brașov - Sighișoara
Rehabilitation of the railway line Brașov - Simeria, component Part of the IV Pan-European Corridor, for the trains circulation with maximum speed of 160 km/h,
Section : Brașov - Sighișoara

Proiect/Project
2004/RO/16/P/PA/003

Faza / Phase:
P.Th. / T.D.

Denumire desen / Drawing Title :

Statia / Station RACOS
Plan cablaj retele cabluri de macaz
Cable lay-out for point machine

Codificare / Codification System	Scara / Scale Fără / No scale	LOT / LOT	Nr. / No 01 / 05

EA51 01 C 11 UX SE 01 1 2 004 1

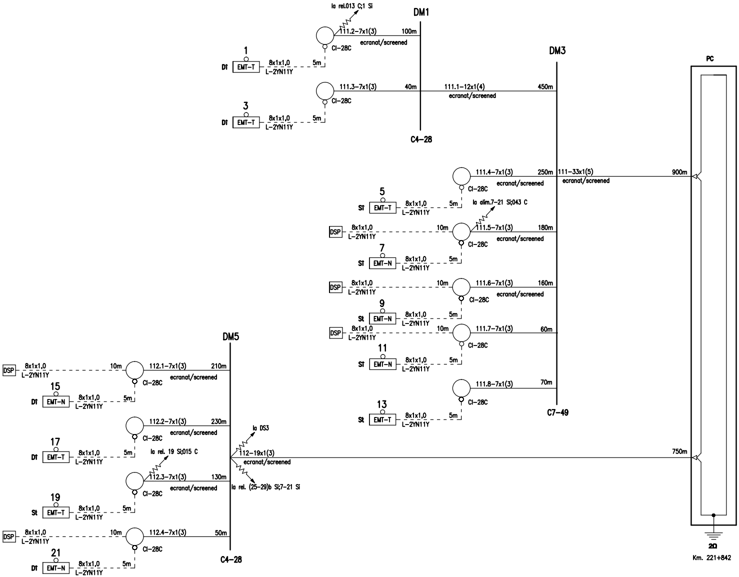
la rel.013 C;1 Si
DM1
111.2–7x1(3)
100m
ecranat/screened
CI–28C
1
Dî
EMT–T
8x1x1,0
L–2YN11Y
5m
111.3–7x1(3)
40m
CI–28C
3
Dî
EMT–T
8x1x1,0
L–2YN11Y
5m
C4–28
DM3
111.1–12x1(4)
450m
ecranat/screened
PC
111.4–7x1(3)
250m
ecranat/screened
CI–28C
111–33x1(5)
ecranat/screened
900m
5
St
EMT–T
8x1x1,0
L–2YN11Y
5m
la alim.7–21 Si;043 C
DSP
8x1x1,0
L–2YN11Y
10m
111.5–7x1(3)
180m
ecranat/screened
CI–28C
7
St
EMT–N
8x1x1,0
L–2YN11Y
5m
DSP
8x1x1,0
L–2YN11Y
10m
111.6–7x1(3)
160m
ecranat/screened
CI–28C
9
St
EMT–N
8x1x1,0
L–2YN11Y
5m
DSP
8x1x1,0
L–2YN11Y
10m
111.7–7x1(3)
60m
CI–28C
11
St
EMT–N
8x1x1,0
L–2YN11Y
5m
111.8–7x1(3)
70m
CI–28C
13
St
EMT–T
8x1x1,0
L–2YN11Y
5m
C7–49
DM5
DSP
8x1x1,0
L–2YN11Y
10m
112.1–7x1(3)
210m
ecranat/screened
CI–28C
15
Dî
EMT–N
8x1x1,0
L–2YN11Y
5m
112.2–7x1(3)
230m
ecranat/screened
CI–28C
17
Dî
EMT–T
8x1x1,0
L–2YN11Y
5m
la DS3
la rel. 19 Si;015 C
112–19x1(3)
ecranat/screened
750m
112.3–7x1(3)
130m
ecranat/screened
CI–28C
la rel. (25–29)b Si;7–21 Si
19
St
EMT–T
8x1x1,0
L–2YN11Y
5m
DSP
8x1x1,0
L–2YN11Y
10m
112.4–7x1(3)
50m
CI–28C
21
Dî
EMT–N
8x1x1,0
L–2YN11Y
5m
C4–28
2Ω
Km. 221+842

Plan de cablaj al pichetilor de macaz cap X – C 111,112

Cable lay–out for point machine X end

Statia: Racos

EA51 01 C 11 UX SE 011 2 004 1   02/05

420x297=0.13mp

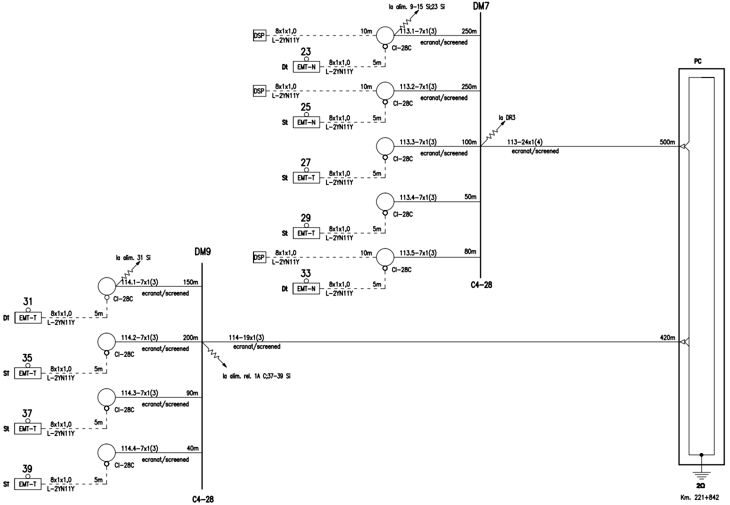
la alim. 9–15 Si;23 Si
DM7
DSP
8x1x1,0
L–2YN11Y
10m
113.1–7x1(3)
250m
ecranat/screened
CI–28C
23
Dt
EMT–N
5m
113.2–7x1(3)
25
St
la DR3
113.3–7x1(3)
100m
113–24x1(4)
500m
27
EMT–T
113.4–7x1(3)
50m
29
113.5–7x1(3)
80m
33
C4–28
PC
DM9
la alim. 31 Si
114.1–7x1(3)
150m
31
114.2–7x1(3)
200m
114–19x1(3)
420m
35
la alim. rel. 1A C;37–39 Si
114.3–7x1(3)
90m
37
114.4–7x1(3)
40m
39
2Ω
Km. 221+842

Plan de cablaj al pichetilor de macaz cap X – C 113,114
Cable lay–out for point machine X end

Statia: Racos

EA51 01 C 11 UX SE 011 2 004 1 03/05

420x297=0.13mp

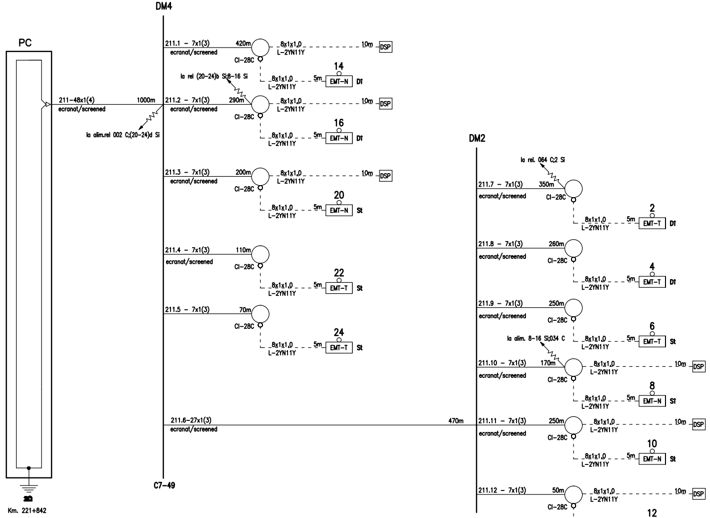
PC
DM4
DM2
211-48x1(4)
ecranat/screened
1000m
la alim.rel 002 C;(20-24)d Si
211.1 - 7x1(3)
ecranat/screened
420m
Cl-28C
8x1x1,0
L-2YN11Y
10m
DSP
14
5m
EMT-N
Dt
la rel (20-24)b Si;8-16 Si
211.2 - 7x1(3)
ecranat/screened
290m
16
211.3 - 7x1(3)
200m
20
St
211.4 - 7x1(3)
110m
22
EMT-T
211.5 - 7x1(3)
70m
24
211.6-27x1(3)
ecranat/screened
470m
C7-49
la rel. 064 C;2 Si
211.7 - 7x1(3)
350m
2
211.8 - 7x1(3)
260m
4
211.9 - 7x1(3)
250m
6
la alim. 8-16 Si;034 C
211.10 - 7x1(3)
170m
8
211.11 - 7x1(3)
250m
10
211.12 - 7x1(3)
50m
12
C4-28
20
Km. 221+842

Statia: Racos

Plan de cablaj al pichetilor de macaz cap Y — C 211

Cable lay—out for point machine Y end

EA51 01 C 11 UX SE 011 2 004 1 04/05

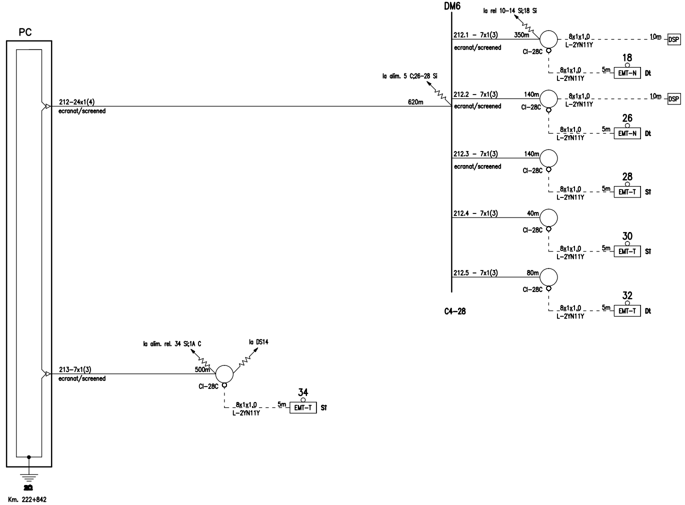
DM6
la rel 10–14 Si;18 Si
PC
212.1 – 7x1(3)
350m
ecranat/screened
Cl–28C
8x1x1,0
L–2YN11Y
10m
DSP
18
8x1x1,0
L–2YN11Y
5m
EMT–N
Dt
la alim. 5 C;26–28 Si
212–24x1(4)
ecranat/screened
620m
212.2 – 7x1(3)
140m
ecranat/screened
Cl–28C
8x1x1,0
L–2YN11Y
10m
DSP
26
8x1x1,0
L–2YN11Y
5m
EMT–N
Dt
212.3 – 7x1(3)
140m
ecranat/screened
Cl–28C
28
8x1x1,0
L–2YN11Y
5m
EMT–T
St
212.4 – 7x1(3)
40m
Cl–28C
30
8x1x1,0
L–2YN11Y
5m
EMT–T
St
212.5 – 7x1(3)
80m
Cl–28C
32
8x1x1,0
L–2YN11Y
5m
EMT–T
Dt
C4–28
la alim. rel. 34 Si;1A C
la DS14
213–7x1(3)
ecranat/screened
500m
Cl–28C
34
8x1x1,0
L–2YN11Y
5m
EMT–T
St
20
Km. 222+842

Plan de cablaj al pichetilor de macaz cap Y – C 212, 213
Cable lay–out for point machine Y end

Statia: Racos

EA51 01 C 11 UX SE 011 2 004 1 05/05

420x297=0.13mp