## LEGENDA
## SYMBOLS

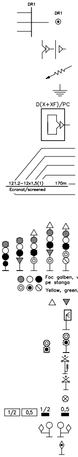
DR1
DR1
D(X+XF)/PC
121.2-12x1,5(1)
170m
Ecranat/screened
1/2
0,5
1/2
0,5

Distribuitor de cabluri
Distribution box no 1

Cap de cablu cu/fara impamantare
Cable terminal with/without earth

Legatura echipotentiala
Equipotential connection

Priza de pamant
Earth terminal

Dulap semnal/Post centralizare
Signal cabinet/Central post

Numarul cablului/Cable no.
Numar de conductoare/Total number of conductors in cable
Sectiunea conductorului/Conductor section
Conductor de rezerva/Spare conductor(s)
Lungimea cablului/Length of cable
Tipul cablului/Cable type

Daca tipul cablului nu este specificat acesta va fi considerat neecranat.

If the cable type is not specified it will be considered unscreened

Semnal de circulatie pe catarg
Main signal on mast

Foc galben, verde, rosu, alb, albastru, indicator circulatie pe stanga
Yellow, green, red, withe, blue, traffic on left indicator lamp

Indicatoare de viteza
Speed and prespeed indicators

Semnal repetitor
Repeater signal

Semnal de manevra pe catarg
Shunting signal on ground / mast

Semibariera automata cu semnal rutier la tn
Level crossing (LC) halfbarriers with road signal

Semnal rutier la trecere la nivel
Level crossing road signal

Opritor
Dead end

Inductor indusi 500Hz sau 1000/2000Hz
500Hz or 1000/2000Hz indusi inductor

Semnal BLA cu reper de avarie pentru TN
ABL signal with fix damage indicator for LC

Semnal avarie la TN
Warning signal for LC

| | | | | | |
|---|---|---|---|---|---|
| **D** | | | | | |
| **C** | | | | | |
| **B** | | | | | |
| **A** | | | | | |
| **Indice**<br>**Index** | **Data**<br>**Date** | **Modificare**<br>**Modification/Revision** | **Proiectant**<br>**Designer** | **Aprobat Consultant**<br>**Approved Consultant** | **Aprobat CFR**<br>**Approved CFR** |

**GUVERNUL ROMANIEI**
**ROMANIAN GOVERNMENT**

**PROIECT FINANȚAT DE UNIUNEA EUROPEANĂ**
**EUROPEAN UNION FINANCED PROJECT**

**CLIENT / CLIENT**

CFR

**C.N.C.F. "C.F.R." - S.A.**

ITALFERR
GRUPPO FERROVIE DELLO STATO
*Joint Venture leader*

Scott Wilson

OBERMEYER
PLANEN + BERATEN GmbH

TECNIC
Consulting Engineers

| **CONSULTANT / CONSULTANT** | | | **Data**<br>**Date** | **Semnătură**<br>**Signature** |
|---|---|---|---|---|
| Aprobat<br>Approved | Şef proiect<br>Project manager | R. Liuzza | 01.2012 | |
| Aprobat<br>Approved | Coordonator Secţiune 1<br>Section 1 Coordinator | C. Gambelli | 01.2012 | |
| Verificat<br>Checked | Expert Cheie<br>Key Expert | P. Amodio | 01.2012 | |

**SUBCONTRACTANT / SUBCONTRACTOR**

AREX COMPANY

| | | | | |
|---|---|---|---|---|
| Aprobat<br>Approved | Responsabil Subconsultant<br>Subconsultant Responsible | A. Stanciu - Dinulescu | 01.2012 | |
| Întocmit<br>Elaborated | Proiectant<br>Designer | ing. Juganaru Adriana | 01.2012 | |

**Reabilitarea liniei de cale ferata Brașov - Simeria, parte componentă a coridorului IV Pan European, pentru circulația trenurilor cu viteza maximă de 160 km/h,**
**Tronsonul : Brașov - Sighișoara**
**Rehabilitation of the railway line Brașov - Simeria, component Part of the IV Pan-European Corridor, for the trains circulation with maximum speed of 160 km/h,**
**Section : Brașov - Sighișoara**

***Proiect/Project***
***2004/RO/16/P/PA/003***

**Faza / Phase:**
**P.Th. / T.D.**

**Denumire desen / Drawing Title :**

### Statia / Station RACOS
### Plan cablaj retele cabluri dulapuri de semnale
### Cable lay-out for signal cabinet

| **Codificare / Codification System** | **Scara / Scale**<br>**Fără / No scale** | **LOT / LOT** | **Nr. / No**<br>**01 / 05** |
|---|---|---|---|

E A 5 1 | 0 1 | C | 1 1 | U X | S E | 0 1 | 1 | 2 | 0 1 2 | 2

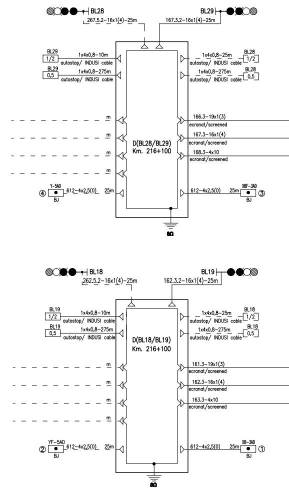
BL28
267.5.2-16x1(4)-25m
BL29
167.3.2-16x1(4)-25m
BL29
1/2
1x4x0,8-10m
autostop/ INDUSI cable
BL29
0,5
1x4x0,8-275m
autostop/ INDUSI cable
1x4x0,8-25m
autostop/ INDUSI cable
BL28
1/2
1x4x0,8-275m
autostop/ INDUSI cable
BL28
0,5
m
m
m
m
D(BL28/BL29)
Km. 216+100
166.3-19x1(3)
ecranat/screened
167.3-16x1(4)
ecranat/screened
168.3-4x10
ecranat/screened
④
Y-5AD
BJ
612-4x2,5(0)
25m
612-4x2,5(0)
25m
XBF-3AD
BJ
③
8Ω
BL18
262.5.2-16x1(4)-25m
BL19
162.3.2-16x1(4)-25m
BL19
1/2
1x4x0,8-10m
autostop/ INDUSI cable
BL19
0,5
1x4x0,8-275m
autostop/ INDUSI cable
1x4x0,8-25m
autostop/ INDUSI cable
BL18
1/2
1x4x0,8-275m
autostop/ INDUSI cable
BL18
0,5
D(BL18/BL19)
Km. 216+100
m
m
m
m
161.3-19x1(3)
ecranat/screened
162.3-16x1(4)
ecranat/screened
163.3-4x10
ecranat/screened
②
YF-5AD
BJ
612-4x2,5(0)
25m
612-4x2,5(0)
25m
XB-3AD
BJ
①
8Ω

**Statia: Racos**

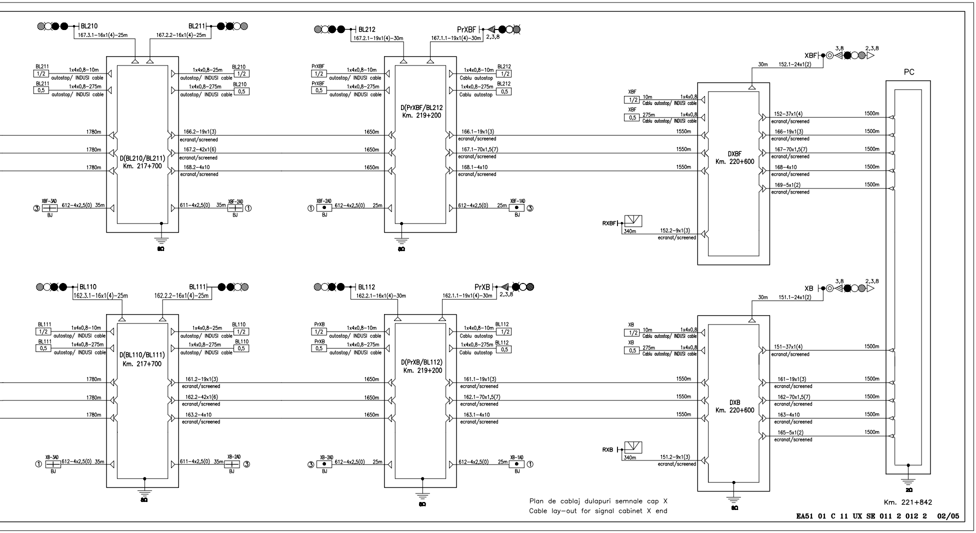
BL210
167.3.1–16x1(4)–25m
BL211
167.2.2–16x1(4)–25m
BL211 1/2 1x4x0,8–10m autostop/ INDUSI cable
BL211 0,5 1x4x0,8–275m autostop/ INDUSI cable
1x4x0,8–25m autostop/ INDUSI cable BL210 1/2
1x4x0,8–275m autostop/ INDUSI cable BL210 0,5
D(BL210/BL211)
Km. 217+700
1780m
166.2–19x1(3) ecranat/screened
167.2–42x1(6) ecranat/screened
168.2–4x10 ecranat/screened
③ XBF–3AD BJ 612–4x2,5(0) 35m
611–4x2,5(0) 35m XBF–2AD BJ ①
8Ω
BL212
167.2.1–19x1(4)–30m
PrXBF
167.1.1–19x1(4)–30m
2,3,8
PrXBF 1/2 1x4x0,8–10m autostop/ INDUSI cable
PrXBF 0,5 1x4x0,8–275m autostop/ INDUSI cable
1x4x0,8–10m Cablu autostop BL212 1/2
1x4x0,8–275m Cablu autostop BL212 0,5
D(PrXBF/BL212)
Km. 219+200
1650m
166.1–19x1(3) ecranat/screened
167.1–70x1,5(7) ecranat/screened
168.1–4x10 ecranat/screened
① XBF–2AD BJ 612–4x2,5(0) 25m
612–4x2,5(0) 25m XBF–1AD BJ ③
8Ω
XBF
3,8
2,3,8
30m 152.1–24x1(2)
XBF 1/2 10m 1x4x0,8 Cablu autostop/ INDUSI cable
XBF 0,5 275m 1x4x0,8 Cablu autostop/ INDUSI cable
1550m
DXBF
Km. 220+600
152–37x1(4) ecranat/screened 1500m
166–19x1(3) ecranat/screened 1500m
167–70x1,5(7) ecranat/screened 1500m
168–4x10 ecranat/screened 1500m
169–5x1(2) ecranat/screened 1500m
RXBF
340m
152.2–9x1(3) ecranat/screened
PC
BL110
162.3.1–16x1(4)–25m
BL111
162.2.2–16x1(4)–25m
BL111 1/2 1x4x0,8–10m autostop/ INDUSI cable
BL111 0,5 1x4x0,8–275m autostop/ INDUSI cable
1x4x0,8–25m autostop/ INDUSI cable BL110 1/2
1x4x0,8–275m autostop/ INDUSI cable BL110 0,5
D(BL110/BL111)
Km. 217+700
1780m
161.2–19x1(3) ecranat/screened
162.2–42x1(6) ecranat/screened
163.2–4x10 ecranat/screened
① XB–3AD BJ 612–4x2,5(0) 35m
611–4x2,5(0) 35m XB–2AD BJ ③
8Ω
BL112
162.2.1–16x1(4)–30m
PrXB
162.1.1–19x1(4)–30m
2,3,8
PrXB 1/2 1x4x0,8–10m autostop/ INDUSI cable
PrXB 0,5 1x4x0,8–275m autostop/ INDUSI cable
1x4x0,8–10m Cablu autostop BL112 1/2
1x4x0,8–275m Cablu autostop BL112 0,5
D(PrXB/BL112)
Km. 219+200
1650m
161.1–19x1(3) ecranat/screened
162.1–70x1,5(7) ecranat/screened
163.1–4x10 ecranat/screened
③ XB–2AD BJ 612–4x2,5(0) 25m
612–4x2,5(0) 25m XB–1AD BJ ①
8Ω
XB
3,8
2,3,8
30m 151.1–24x1(2)
XB 1/2 10m 1x4x0,8 Cablu autostop/ INDUSI cable
XB 0,5 275m 1x4x0,8 Cablu autostop/ INDUSI cable
1550m
DXB
Km. 220+600
151–37x1(4) ecranat/screened 1500m
161–19x1(3) ecranat/screened 1500m
162–70x1,5(7) ecranat/screened 1500m
163–4x10 ecranat/screened 1500m
165–5x1(2) ecranat/screened 1500m
RXB
340m
151.2–9x1(3) ecranat/screened
8Ω
2Ω
Km. 221+842

Plan de cablaj dulapuri semnale cap X
Cable lay–out for signal cabinet X end

**EA51 01 C 11 UX SE 011 2 012 2 02/05**

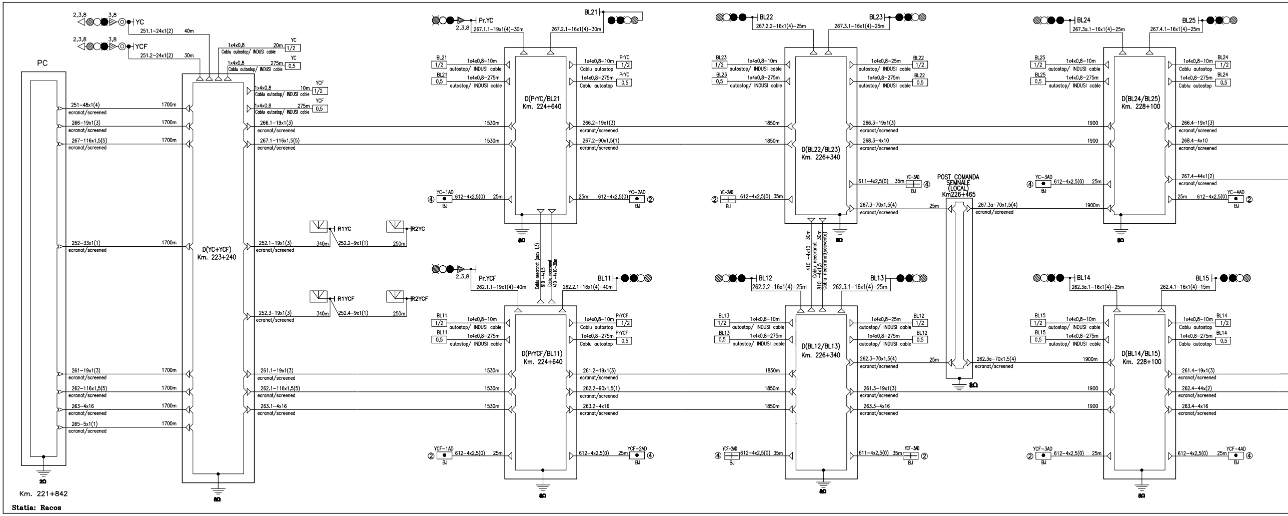
PC
2Ω
Km. 221+842
Statia: Racos
D(YC+YCF)
Km. 223+240
8Ω
YC
YCF
2,3,8
3,8
251.1-24x1(2) 40m
251.2-24x1(2) 30m
1x4x0,8 20m 1/2
Cablu autostop/ INDUSI cable
1x4x0,8 275m 0,5
1x4x0,8 10m 1/2
1x4x0,8 275m 0,5
251-48x1(4) 1700m ecranat/screened
266-19x1(3) 1700m ecranat/screened
267-116x1,5(5) 1700m ecranat/screened
252-33x1(1) 1700m ecranat/screened
261-19x1(3) 1700m ecranat/screened
262-116x1,5(5) 1700m ecranat/screened
263-4x16 1700m ecranat/screened
265-5x1(1) 1700m ecranat/screened
266.1-19x1(3) 1530m ecranat/screened
267.1-116x1,5(5) 1530m ecranat/screened
252.1-19x1(3) 340m ecranat/screened
252.2-9x1(1) 250m
R1YC
R2YC
252.3-19x1(3) 340m ecranat/screened
252.4-9x1(1) 250m
R1YCF
R2YCF
261.1-19x1(3) 1530m ecranat/screened
262.1-116x1,5(5) 1530m ecranat/screened
263.1-4x16 1530m ecranat/screened
Pr.YC
267.1.1-19x1(4)-30m
BL21
267.2.1-16x1(4)-30m
D(PrYC/BL21)
Km. 224+640
1x4x0,8-10m autostop/ INDUSI cable
1x4x0,8-275m autostop/ INDUSI cable
PrYC
Cablu autostop
266.2-19x1(3) 1850m ecranat/screened
267.2-90x1,5(1) 1850m ecranat/screened
YC-1AD 612-4x2,5(0) 25m BJ
YC-2AD 612-4x2,5(0) 25m BJ
Cablu neecranat (secv 1,3) 810-4x1,5
Cablu neecranat 410-4x10-30m
Pr.YCF
262.1.1-19x1(4)-40m
BL11
262.2.1-16x1(4)-40m
D(PrYCF/BL11)
Km. 224+640
PrYCF
261.2-19x1(3) 1850m ecranat/screened
262.2-90x1,5(1) 1850m ecranat/screened
263.2-4x16 1850m ecranat/screened
YCF-1AD 612-4x2,5(0) 25m BJ
YCF-2AD 612-4x2,5(0) 25m BJ
BL22
267.2.2-16x1(4)-25m
BL23
267.3.1-16x1(4)-25m
D(BL22/BL23)
Km. 226+340
266.3-19x1(3) 1900 ecranat/screened
268.3-4x10 1900 ecranat/screened
611-4x2,5(0) 35m YC-3AD BJ
YC-2AD 612-4x2,5(0) 35m BJ
267.3-70x1,5(4) 25m ecranat/screened
410-4x10 30m
810-4x1,5 30m Cablu neecranat(secvente)
BL12
262.2.2-16x1(4)-25m
BL13
262.3.1-16x1(4)-25m
D(BL12/BL13)
Km. 226+340
262.3-70x1,5(4) 25m ecranat/screened
261.3-19x1(3) 1900 ecranat/screened
262.3-90x1,5(1) 1900 ecranat/screened
263.3-4x16 1900 ecranat/screened
YCF-2AD 612-4x2,5(0) 35m BJ
611-4x2,5(0) 35m YCF-3AD BJ
POST COMANDA SEMNALE (LOCAL) Km226+465
267.3a-70x1,5(4) 1900m ecranat/screened
262.3a-70x1,5(4) 1900m ecranat/screened
BL24
267.3a.1-16x1(4)-25m
BL25
267.4.1-16x1(4)-25m
D(BL24/BL25)
Km. 228+100
266.4-19x1(3) ecranat/screened
268.4-4x10 ecranat/screened
267.4-44x1(2) ecranat/screened
YC-3AD 612-4x2,5(0) 25m BJ
YC-4AD 612-4x2,5(0) 25m BJ
BL14
262.3a.1-16x1(4)-25m
BL15
262.4.1-16x1(4)-15m
D(BL14/BL15)
Km. 228+100
261.4-19x1(3) ecranat/screened
262.4-44x(2) ecranat/screened
263.4-4x16 ecranat/screened
YCF-3AD 612-4x2,5(0) 25m BJ
YCF-4AD 612-4x2,5(0) 25m BJ
②
④

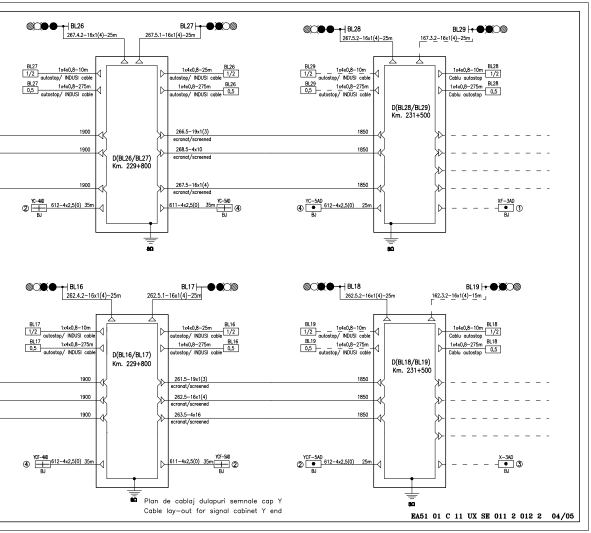
BL26
BL27
267.4.2–16x1(4)–25m
267.5.1–16x1(4)–25m
BL28
BL29
267.5.2–16x1(4)–25m
167.3.2–16x1(4)–25m
1x4x0,8–10m
1x4x0,8–275m
1x4x0,8–25m
autostop/ INDUSI cable
Cablu autostop
1/2
0,5
D(BL26/BL27)
Km. 229+800
D(BL28/BL29)
Km. 231+500
266.5–19x1(3)
268.5–4x10
267.5–16x1(4)
ecranat/screened
1900
1850
YC-4AD
YC-5AD
XF-3AD
612–4x2,5(0) 35m
611–4x2,5(0) 35m
612–4x2,5(0) 25m
BJ
8Ω
BL16
BL17
262.4.2–16x1(4)–25m
262.5.1–16x1(4)–25m
BL18
BL19
262.5.2–16x1(4)–25m
162.3.2–16x1(4)–15m
D(BL16/BL17)
Km. 229+800
D(BL18/BL19)
Km. 231+500
261.5–19x1(3)
262.5–16x1(4)
263.5–4x16
YCF-4AD
YCF-5AD
X-3AD
① ② ③ ④

Plan de cablaj dulapuri semnale cap Y
Cable lay-out for signal cabinet Y end

**EA51 01 C 11 UX SE 011 2 012 2 04/05**

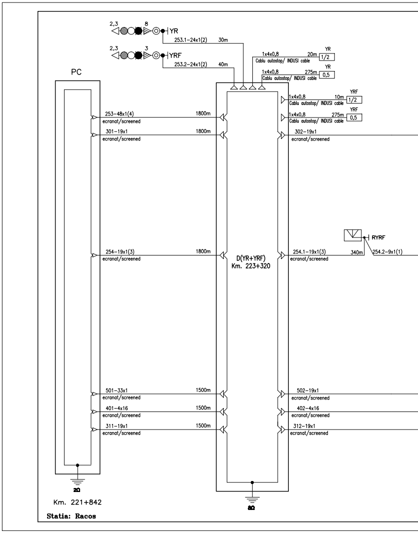
2,3
8
YR
3
YRF
253.1–24x1(2) 30m
253.2–24x1(2) 40m
1x4x0,8 20m
1x4x0,8 275m
1x4x0,8 10m
Cablu autostop/ INDUSI cable
1/2
0,5
PC
253–48x1(4) 1800m
301–19x1 1800m
254–19x1(3) 1800m
501–33x1 1500m
401–4x16 1500m
311–19x1 1500m
ecranat/screened
D(YR+YRF)
Km. 223+320
302–19x1
254.1–19x1(3) 340m
RYRF
254.2–9x1(1)
502–19x1
402–4x16
312–19x1
2Ω
8Ω
Km. 221+842

**Statia: Racos**

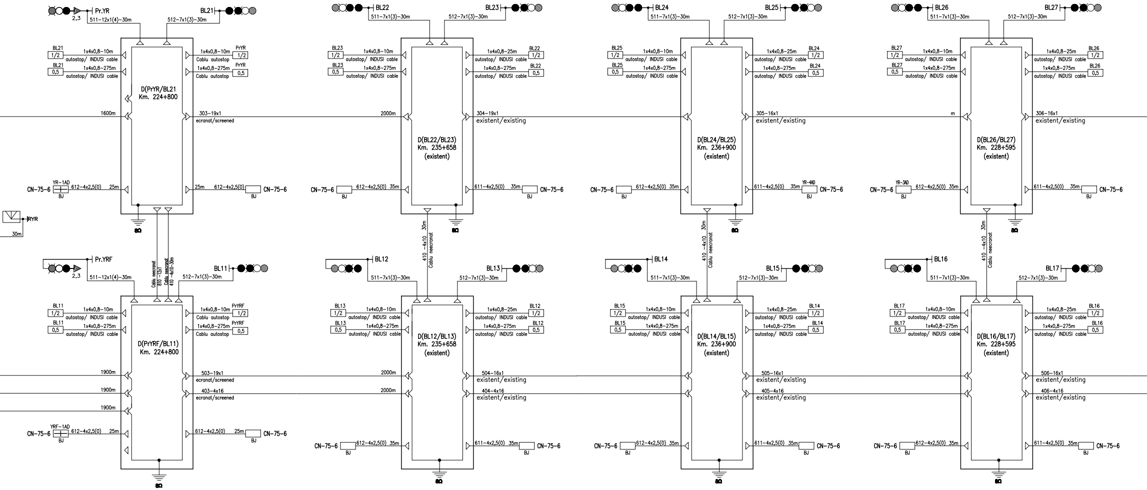
Pr.YR
2,3
511-12x1(4)-30m
BL21
512-7x1(3)-30m
BL21 1/2 1x4x0,8-10m autostop/ INDUSI cable
BL21 0,5 1x4x0,8-275m autostop/ INDUSI cable
1x4x0,8-10m Cablu autostop PrYR 1/2
1x4x0,8-275m Cablu autostop PrYR 0,5
D(PrYR/BL21)
Km. 224+800
1600m
303-19x1
ecranat/screened
CN-75-6 YR-1AD BJ 612-4x2,5(0) 25m
25m 612-4x2,5(0) BJ CN-75-6
8Ω
RYR
30m
BL22
511-7x1(3)-30m
BL23
512-7x1(3)-30m
BL23 1/2 1x4x0,8-10m autostop/ INDUSI cable
BL23 0,5 1x4x0,8-275m autostop/ INDUSI cable
1x4x0,8-25m autostop/ INDUSI cable BL22 1/2
1x4x0,8-275m autostop/ INDUSI cable BL22 0,5
2000m
304-19x1
existent/existing
D(BL22/BL23)
Km. 235+658
(existent)
CN-75-6 BJ 612-4x2,5(0) 35m
611-4x2,5(0) 35m BJ CN-75-6
8Ω
410 -4x10 30m
Cablu neecranat
BL24
511-7x1(3)-30m
BL25
512-7x1(3)-30m
BL25 1/2 1x4x0,8-10m autostop/ INDUSI cable
BL25 0,5 1x4x0,8-275m autostop/ INDUSI cable
1x4x0,8-25m autostop/ INDUSI cable BL24 1/2
1x4x0,8-275m autostop/ INDUSI cable BL24 0,5
305-16x1
existent/existing
D(BL24/BL25)
Km. 236+900
(existent)
CN-75-6 BJ 612-4x2,5(0) 35m
611-4x2,5(0) 35m YR-4AD BJ CN-75-6
8Ω
410 -4x10 30m
Cablu neecranat
BL26
511-7x1(3)-30m
BL27
512-7x1(3)-30m
BL27 1/2 1x4x0,8-10m autostop/ INDUSI cable
BL27 0,5 1x4x0,8-275m autostop/ INDUSI cable
1x4x0,8-25m autostop/ INDUSI cable BL26 1/2
1x4x0,8-275m autostop/ INDUSI cable BL26 0,5
m
306-16x1
existent/existing
D(BL26/BL27)
Km. 228+595
(existent)
CN-75-6 YR-3AD BJ 612-4x2,5(0) 35m
611-4x2,5(0) 35m BJ CN-75-6
8Ω
410 -4x10 30m
Cablu neecranat
Pr.YRF
2,3
511-12x1(4)-30m
Cablu neecranat 810 -12x1
Cablu neecranat 410 -4x10-30m
BL11
512-7x1(3)-30m
BL11 1/2 1x4x0,8-10m autostop/ INDUSI cable
BL11 0,5 1x4x0,8-275m autostop/ INDUSI cable
1x4x0,8-10m Cablu autostop PrYRF 1/2
1x4x0,8-275m Cablu autostop PrYRF 0,5
D(PrYRF/BL11)
Km. 224+800
1900m
503-19x1
ecranat/screened
1900m
403-4x16
ecranat/screened
1900m
CN-75-6 YRF-1AD BJ 612-4x2,5(0) 25m
612-4x2,5(0) 25m BJ CN-75-6
8Ω
BL12
511-7x1(3)-30m
BL13
512-7x1(3)-30m
BL13 1/2 1x4x0,8-10m autostop/ INDUSI cable
BL13 0,5 1x4x0,8-275m autostop/ INDUSI cable
1x4x0,8-25m autostop/ INDUSI cable BL12 1/2
1x4x0,8-275m autostop/ INDUSI cable BL12 0,5
D(BL12/BL13)
Km. 235+658
(existent)
2000m
504-16x1
existent/existing
2000m
404-4x16
existent/existing
CN-75-6 BJ 612-4x2,5(0) 35m
611-4x2,5(0) 35m BJ CN-75-6
8Ω
BL14
511-7x1(3)-30m
BL15
512-7x1(3)-30m
BL15 1/2 1x4x0,8-10m autostop/ INDUSI cable
BL15 0,5 1x4x0,8-275m autostop/ INDUSI cable
1x4x0,8-25m autostop/ INDUSI cable BL14 1/2
1x4x0,8-275m autostop/ INDUSI cable BL14 0,5
D(BL14/BL15)
Km. 236+900
(existent)
505-16x1
existent/existing
405-4x16
existent/existing
CN-75-6 BJ 612-4x2,5(0) 35m
611-4x2,5(0) 35m BJ CN-75-6
8Ω
BL16
511-7x1(3)-30m
BL17
512-7x1(3)-30m
BL17 1/2 1x4x0,8-10m autostop/ INDUSI cable
BL17 0,5 1x4x0,8-275m autostop/ INDUSI cable
1x4x0,8-25m autostop/ INDUSI cable BL16 1/2
1x4x0,8-275m autostop/ INDUSI cable BL16 0,5
D(BL16/BL17)
Km. 228+595
(existent)
506-16x1
existent/existing
406-4x16
existent/existing
CN-75-6 BJ 612-4x2,5(0) 35m
611-4x2,5(0) 35m BJ CN-75-6
8Ω

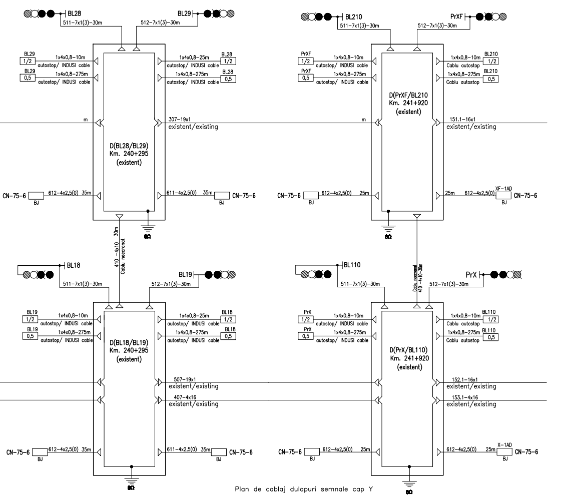
BL28
511-7x1(3)-30m
BL29
512-7x1(3)-30m
BL210
PrXF
D(BL28/BL29)
Km. 240+295
(existent)
D(PrXF/BL210
Km. 241+920
(existent)
307-19x1
existent/existing
151.1-16x1
existent/existing
1x4x0,8-10m
1x4x0,8-25m
1x4x0,8-275m
autostop/ INDUSI cable
Cablu autostop
CN-75-6
612-4x2,5(0)
611-4x2,5(0)
35m
25m
XF-1AD
BJ
8Ω
410 -4x10 30m
Cablu neecranat
BL18
BL19
BL110
PrX
D(BL18/BL19)
Km. 240+295
(existent)
D(PrX/BL110)
Km. 241+920
(existent)
507-19x1
existent/existing
407-4x16
existent/existing
152.1-16x1
existent/existing
153.1-4x16
existent/existing
X-1AD

Plan de cablaj dulapuri semnale cap Y
Cable lay-out for signal cabinet Y end

**EA51 01 C 11 UX SE 011 2 012 2 05/05**

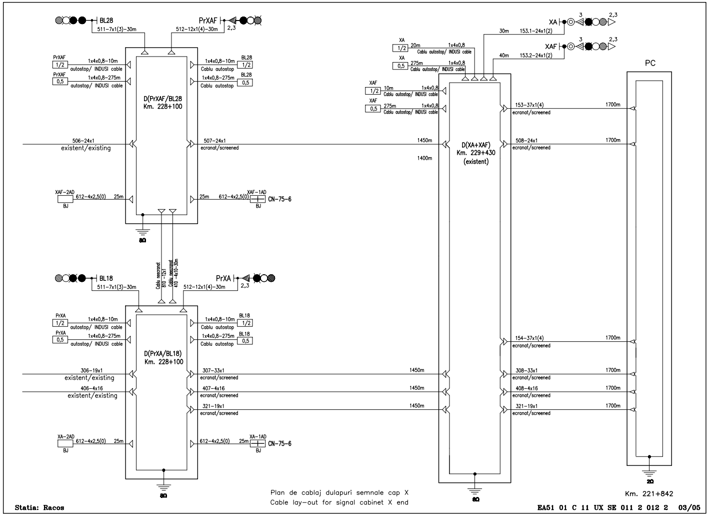
BL28
511-7x1(3)-30m
PrXAF
512-12x1(4)-30m
2,3
XA
XAF
30m
40m
153.1-24x1(2)
153.2-24x1(2)
PC
D(PrXAF/BL28
Km. 228+100
D(XA+XAF)
Km. 229+430
(existent)
506-24x1
existent/existing
507-24x1
ecranat/screened
1450m
1400m
153-37x1(4)
508-24x1
1700m
XAF-2AD
XAF-1AD
612-4x2,5(0)
25m
CN-75-6
BJ
8Ω
Cablu neecranat
810-12x1
410-4x10-30m
BL18
PrXA
D(PrXA/BL18)
Km. 228+100
306-19x1
existent/existing
406-4x16
existent/existing
307-33x1
407-4x16
321-19x1
154-37x1(4)
308-33x1
408-4x16
ecranat/screened
XA-2AD
XA-1AD
2Ω
Km. 221+842

**Statia: Racos**

Plan de cablaj dulapuri semnale cap X
Cable lay-out for signal cabinet X end

**EA51 01 C 11 UX SE 011 2 012 2 03/05**