SECTIUNEA A–A
A–A SECTION

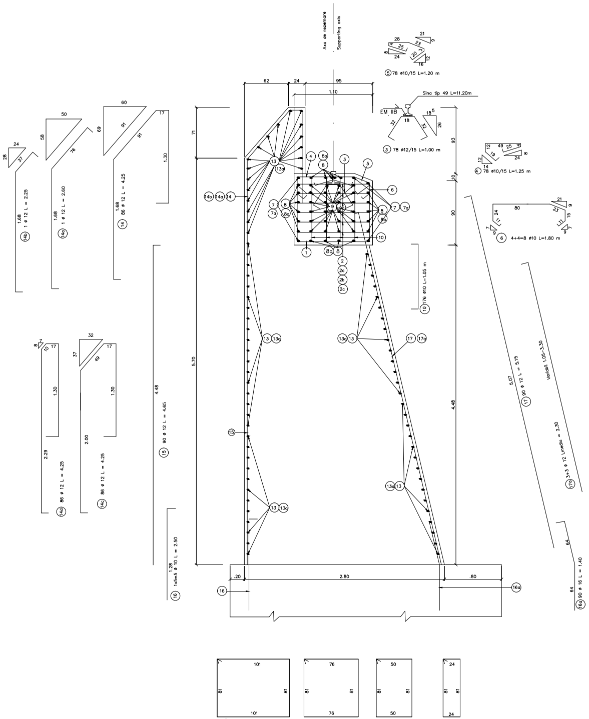
Axa de rezemare
Supporting axis
62
24
95
1.10
71
5.70
93
10
90
4.48
4.48
28
24
37
1.68
(14b) 1 ø 12 L = 2.25
50
58
76
1.68
(14a) 1 ø 12 L = 2.60
60
69
91
91
17
1.68
(14) 86 ø 12 L = 4.25
1.30
7
8
10
17
1.30
2.29
(14d) 86 ø 12 L = 4.25
32
37
49
17
1.30
2.00
(14c) 86 ø 12 L = 4.25
4.48
(15) 90 ø 12 L = 4.65
1.28
(16) 1x5=5 ø 10 L = 2.50
28
4
25
8
24
21
23
9
3
20
12
16
(5) 78 ø10/15 L=1.20 m
Sina tip 49 L=11.20m
EM IIB
18
32
32
18
5
26
(3) 78 ø12/15 L=1.00 m
12
49
25
4
19
24
8
12
14
(4) 78 ø10/15 L=1.25 m
80
24
11
7
9
21
9
23
15
11
7
9
(6) 4+4=8 ø10 L=1.80 m
(10) 176 ø10 L=1.05 m
5.07
(17) 90 ø 12 L = 5.15
Variabil 1.05–3.30
(17a) 3+3 ø 12 Lmediu = 2.30
64
64
(16a) 90 ø 16 L = 1.40
14b
14a
14
13
13a
4
8a
8
3
5
6
7
7a
8
8a
9
9a
7
7a
8
8a
10
1
8a
8
2
2a
2b
2c
13
13a
13a
13
17
17a
15
13a
13
13
13a
.20
2.80
.80
16
16a
101
81
81
101
(1) 86 ø 10/15cm L = 3.80
76
81
81
76
(1a) 2 ø 10 L = 3.30
50
81
81
50
(1b) 2 ø 10 L = 2.80
24
81
81
24
(1c) 2 ø 10 L = 2.25

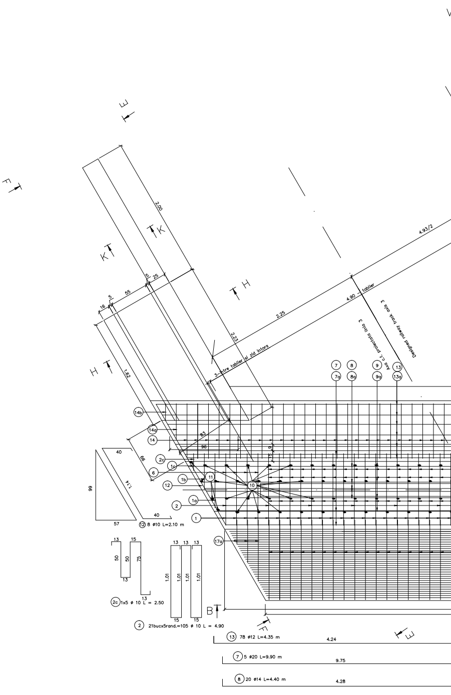
E
F
K
K
H
H
2.00
16
5
55
5
25
1.62
2.23
2.25
4.93/2
4.90 – tablier
3– între tablier si zid întors
Axa c.f. proiectata linia 3
Designed railway track axis 3
7
7a
8
8a
9
9a
13
13a
14b
14a
14
83
96
9
2c
1c
6
1b
11
10
12
1a
2
1
17a
40
88
1.14
99
40
57
(12) 8 ø10 L=2.10 m
13
15
50
50
75
13
13
(2c) 1x5 ø 10 L = 2.50
13
13
13
1.01
1.01
1.01
1.01
15
15
(2) 21bucx5rand.=105 ø 10 L = 4.90
B
F
E
(13) 78 ø12 L=4.35 m
4.24
(7) 5 ø20 L=9.90 m
9.75
(8) 20 ø14 L=4.40 m
4.28
(9) 24 ø12 L=9.65 m
9.51

VEDERE IN PLAN
PLAN VIEW

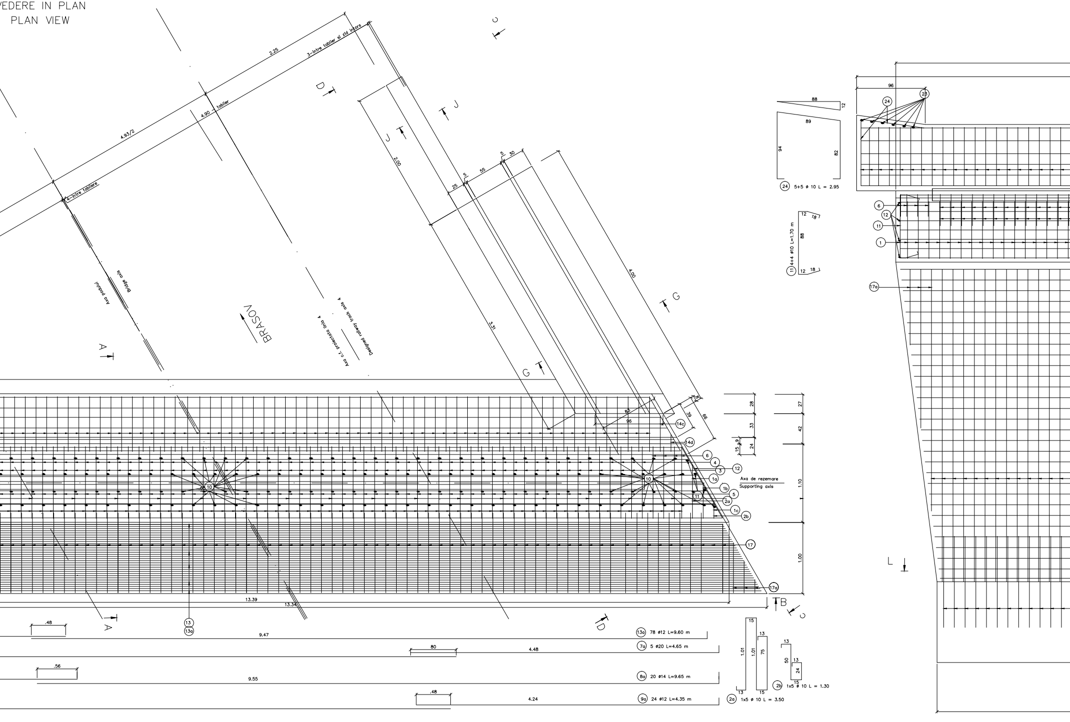

2.25
3-intre tablier si zid intors
4.93/2
4.90 - tablier
4-intre tabliere
Axa podului
Bridge axis
BRASOV
Axa c.f. proiectata linia 4
Designed railway track axis 4
A
A
B
C
C
D
D
G
G
J
J
L
2.00
3.31
4.00
25
5
55
5
30
85
96
39
66
5
28
33
24
15
9
27
42
1.10
1.00
13.39
13.34
.48
9.47
80
4.48
.56
9.55
.48
4.24
Axa de rezemare
Supporting axis
1
1a
1b
1c
2a
2b
3
4
5
6
10
11
12
13
13a
14c
14d
17
17a
23
24
96
88
12
89
94
82
24 5+5 ø 10 L = 2.95
12
18
88
18
11 4+4 ø10 L=1.70 m
13a 78 ø12 L=9.60 m
7a 5 ø20 L=4.65 m
8a 20 ø14 L=9.65 m
9a 24 ø12 L=4.35 m
15
13
1.01
1.01
75
13
15
13
50
13
24
15
2b 1x5 ø 10 L = 1.30
2a 1x5 ø 10 L = 3.50

VEDERE B–B
B–B VIEW

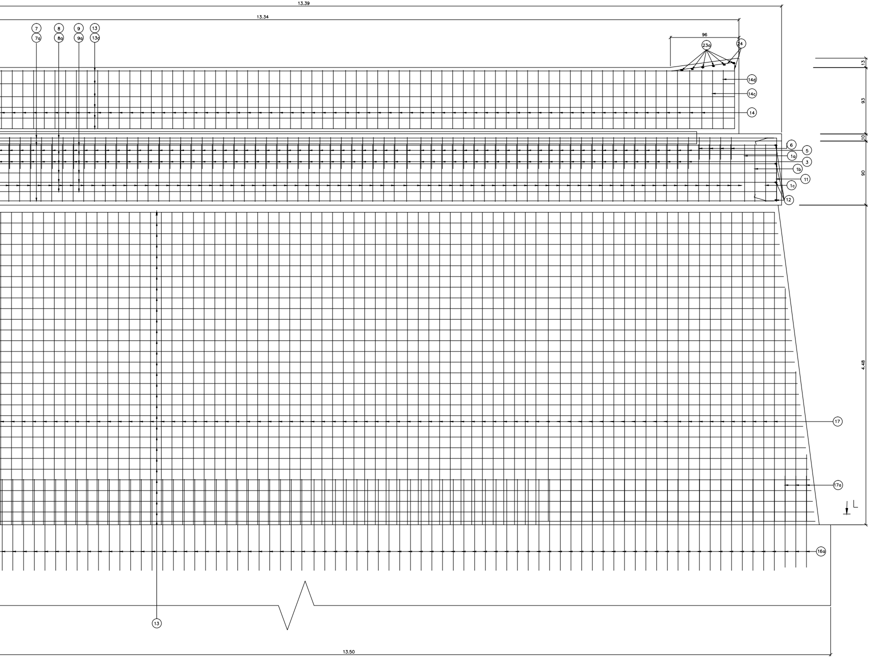
13.39
13.34
96
7
7a
8
8a
9
9a
13
13a
23a
24
14d
14c
14
6
5
1a
3
1b
11
1c
12
13
93
10
90
4.48
17
17a
L
16a
13
13.50

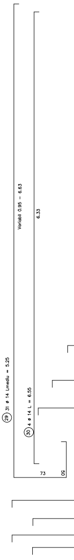
Variabil 0.95 – 6.63
6.33
29 31 ø 14 Lmediu = 5.25
30 4 ø 14 L = 6.55
73
50

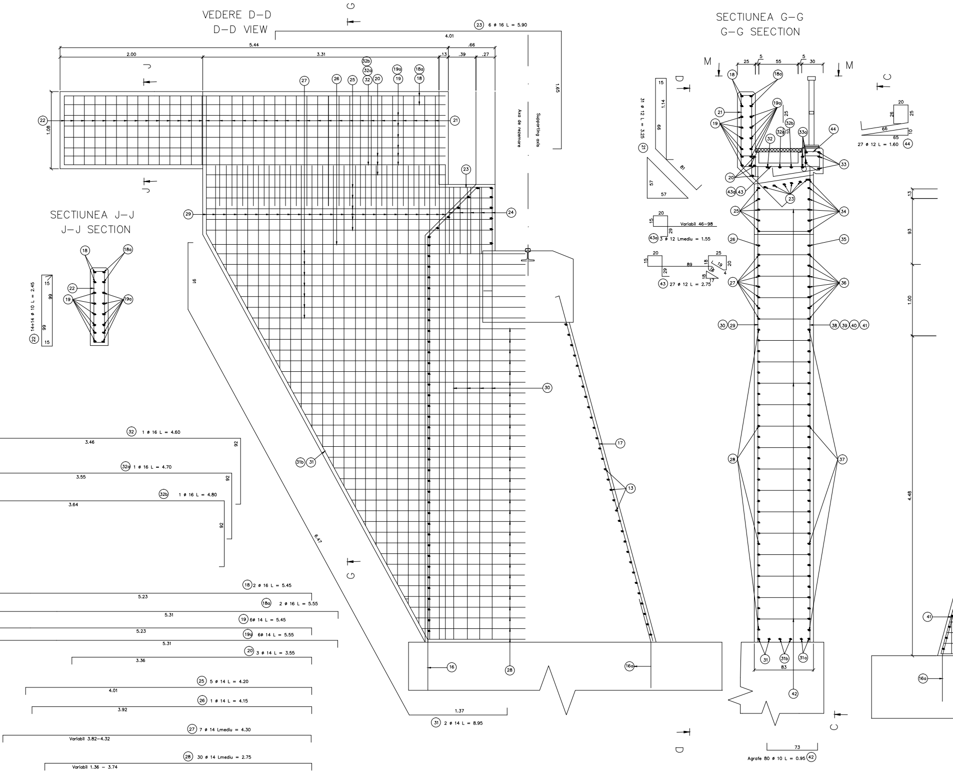
VEDERE D–D
D–D VIEW
SECTIUNEA G–G
G–G SEECTION
SECTIUNEA J–J
J–J SECTION
Supporting axis
Axa de rezemare
(23) 6 ø 16 L = 5.90
5.44
2.00
3.31
4.01
.66
.13
.39
.27
1.65
1.08
91
6.47
1.37
(31) 2 ø 14 L = 8.95
(22) 14+14 ø 10 L = 2.45
(21) 31 ø 12 L = 3.25
1.14
99
81
57
(43a) 3 ø 12 Lmediu = 1.55
Variabil 46–98
(43) 27 ø 12 L = 2.75
89
(44) 27 ø 12 L = 1.60
66
65
Agrafe 80 ø 10 L = 0.95 (42)
73
83
93
1.00
4.48
(32) 1 ø 16 L = 4.60
3.46
92
(32a) 1 ø 16 L = 4.70
3.55
(32b) 1 ø 16 L = 4.80
3.64
(18) 2 ø 16 L = 5.45
5.23
(18a) 2 ø 16 L = 5.55
5.31
(19) 6ø 14 L = 5.45
5.23
(19a) 6ø 14 L = 5.55
5.31
(20) 3 ø 14 L = 3.55
3.36
(25) 5 ø 14 L = 4.20
4.01
(26) 1 ø 14 L = 4.15
3.92
(27) 7 ø 14 Lmediu = 4.30
Variabil 3.82–4.32
(28) 30 ø 14 Lmediu = 2.75
Variabil 1.36 – 3.74
M
D
C
G
J

VEDERE C-C
C-C VIEW

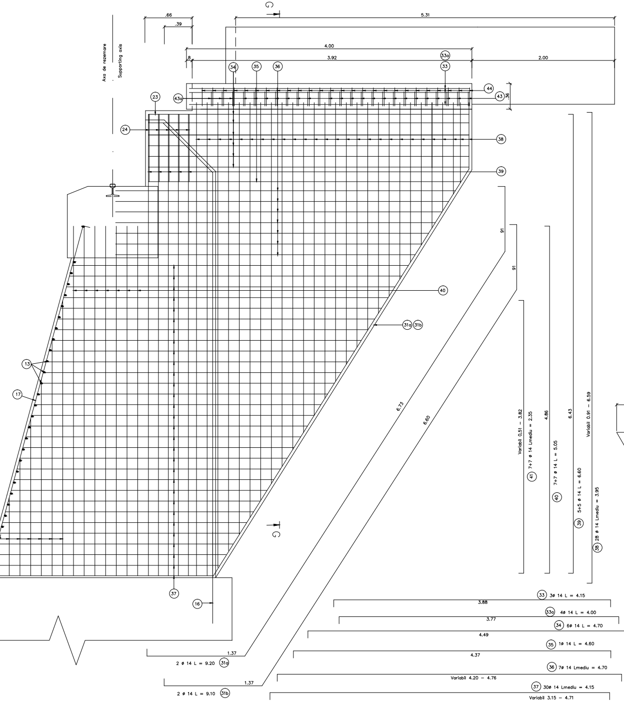
G
.66
.39
5.31
Axa de rezemare
Supporting axis
4.00
.8
3.92
2.00
33a
34
35
36
33
44
43a
43
36
23
24
38
39
91
91
40
31a 31b
13
17
6.73
6.60
Variabil 0,51 - 3.82
41 7+7 ø 14 Lmediu = 2.35
4.86
40 7+7 ø 14 L = 5.05
6.43
39 5+5 ø 14 L = 6.60
Variabil 0.91 - 6.59
38 28 ø 14 Lmediu = 3.95
G
37
16
33 3ø 14 L = 4.15
3.88
33a 4ø 14 L = 4.00
3.77
34 6ø 14 L = 4.70
4.49
35 1ø 14 L = 4.60
4.37
36 7ø 14 Lmediu = 4.70
Variabil 4.20 - 4.76
37 30ø 14 Lmediu = 4.15
Variabil 3.15 - 4.71
1.37
2 ø 14 L = 9.20 31a
1.37
2 ø 14 L = 9.10 31b

VEDERE M-M
M-M VIEW

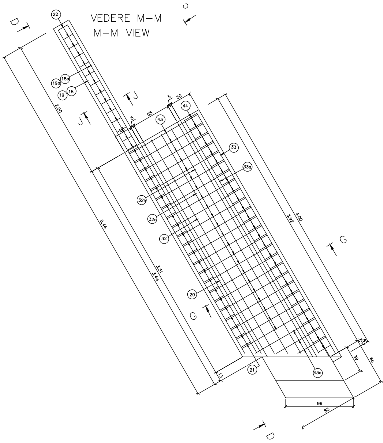
22
D
C
19a 18a
19 18
2.00
J
J
5
30
55
5
44
43
33
33a
32b
32a
32
5.44
3.92
4.00
G
3.31
3.44
20
G
21
13
43a
39
66
8
96
83
D

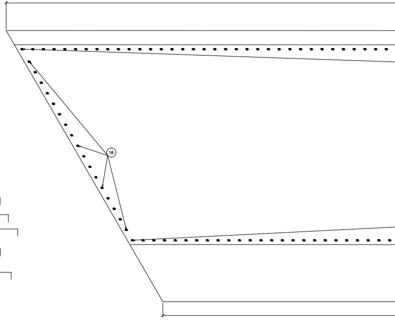

DALE PREFABRICATE DIN BETON
CONCRETE PREFAB SLABS

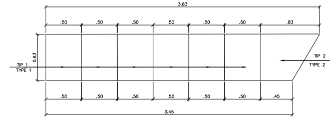
3.83
.50
.50
.50
.50
.50
.50
.83
0.63
TIP 1
TYPE 1
TIP 2
TYPE 2
.50
.50
.50
.50
.50
.50
.45
3.45

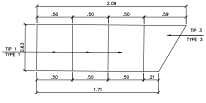
2.09
.50
.50
.50
.59
TIP 3
TYPE 3
TIP 1
TYPE 1
0.63
.50
.50
.50
.21
1.71

ARMARE DALA PREFABRICATA DIN BETON

CONCRETE PREFAB SLABS REINFORCED

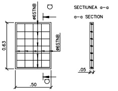
ø6STNB
a
ø6STNB
0.63
.50
a
SECTIUNEA a–a
a–a SECTION
.05

EXTRAS DE ARMATURA STNB

REIFORCEMENT TABLE STNB

TIP/TYPE	TIP ARMATURA TYEPE REINFOCEMENT	Nr. BUC. No. PIECE	kg/m	m/buc. m/piece	kg
TIP 1	STNB 6 G.Q.283	9	0.222	6.15	12.30
TIP2	STNB 6 G.Q.283	1	0.222	7.06	1.55
TIP2	STNB 6 G.Q.283	1	0.222	2.27	0.50
				TOTAL	14.35 kg

TOTAl pentru 2 culei (2 abutments): 2 x 14.35kg=28.60kg

VEDERE N–N
N–N VIEW

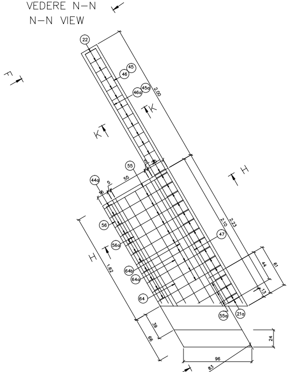
E
F
22
45
46
45a
46a
2.00
K
K
H
55
44a
5
55
36
56
56a
2.10
2.23
47
H
1.62
64b
64a
64
44
61
13
55a
21a
39
66
24
96
83
F

SECTIUNEA L–L (AMPRENTA ELEVATIEI PE FUNDATIE)
L–L SECTION

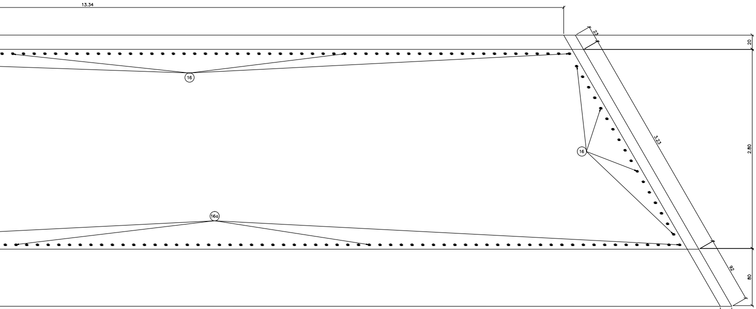
13.34
23
20
16
16
3.23
2.80
16a
92
80
13.34
.16

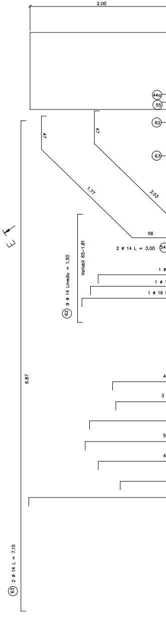
2.00
44a
55
62
63
47
47
1.77
2.03
E
56
2 ø 14 L = 3.00
54
Variabil 65–1.81
62
9 ø 14 Lmediu = 1.50
1 ø
1 ø 1
1 ø 16 L
6.87
4
3
5
4
63
2 ø 14 L = 7.10

VEDERE F–F
F–F VIEW

SECTIUNE H–H
H–H SECTION

SECTIUNE K–K
K–K SECTION

VEDERE E–E
E–E VIEW

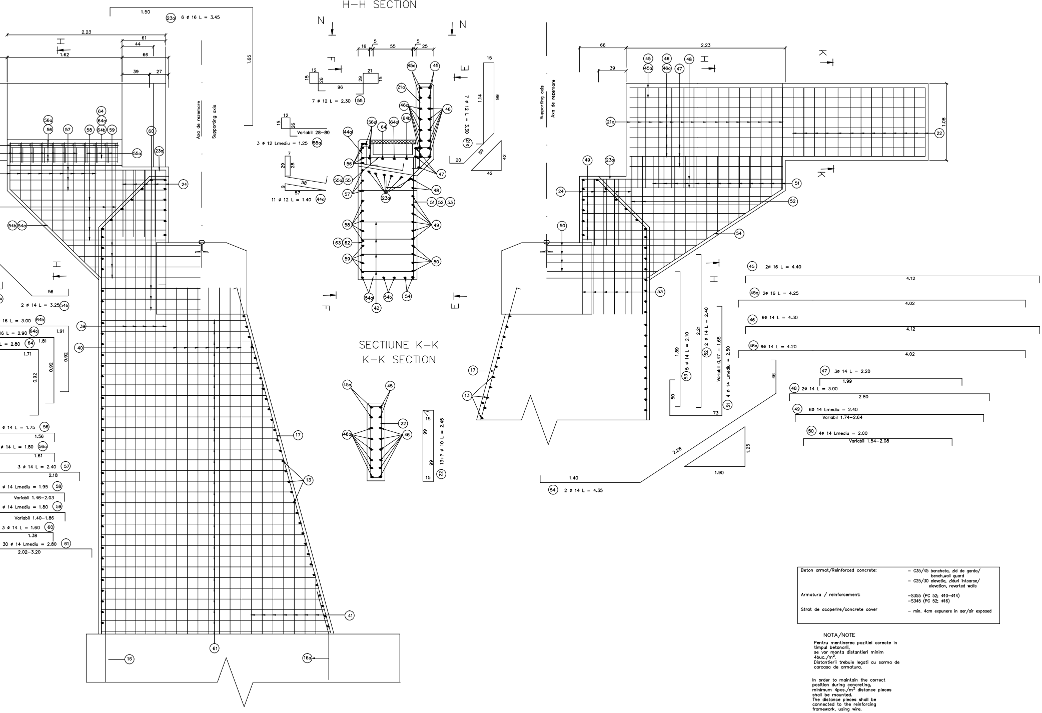

23a 6 ø 16 L = 3.45
1.50
1.65
2.23
61
44
66
1.62
39
27
Axa de rezemare
Supporting axis
56a 56 57 58 64 64a 64b 59 60
55a
23a
24
54b 54a
56
2 ø 14 L = 3.25 54b
16 L = 3.00 64b
16 L = 2.90 64a
L = 2.80 64
1.91
1.81
1.71
0.92
39
40
ø 14 L = 1.75 56
1.56
ø 14 L = 1.80 56a
1.61
3 ø 14 L = 2.40 57
2.18
ø 14 Lmediu = 1.95 58
Variabil 1.46–2.03
ø 14 Lmediu = 1.80 59
Variabil 1.40–1.86
3 ø 14 L = 1.60 60
1.38
30 ø 14 Lmediu = 2.80 61
2.02–3.20
17
13
41
61
16
16a
N
F
E
16 5 55 5 25
12 15 26 96 29 21 15
7 ø 12 L = 2.30 55
12 15 26 Variabil 28–80
3 ø 12 Lmediu = 1.25 55a
7 29 28 58 9 57
11 ø 12 L = 1.40 44a
45a 45 21a 46a 46 56a 64 64a 64b 44a 56 47 55a 55 57 23a 48 51 52 53 58 49 63 62 59 50 54a 54b 54 42
15 1.14 99
7 ø 12 L = 3.30 21a
20 59 42 42
45a 45 22 46a 46
15 99 99 15
22 13+? ø 10 L = 2.45
17
13
Supporting axis
Axa de rezemare
66
39
2.23
45 45a 46 46a 47 48
21a
22
K
49 23a
24
51
52
50
54
53
45 2ø 16 L = 4.40
4.12
45a 2ø 16 L = 4.25
4.02
46 6ø 14 L = 4.30
4.12
46a 6ø 14 L = 4.20
4.02
47 3ø 14 L = 2.20
1.99
48 2ø 14 L = 3.00
2.80
49 6ø 14 Lmediu = 2.40
Variabil 1.74–2.64
50 4ø 14 Lmediu = 2.00
Variabil 1.54–2.08
1.89
53 5 ø 14 L = 2.10
50
2.21
52 2 ø 14 L = 2.40
Variabil 0,47 – 1.65
51 4 ø 14 Lmediu = 2.50
73
46
2.28
1.25
1.90
1.40
54 2 ø 14 L = 4.35
1.08

Beton armat/Reinforced concrete:	– C35/45 bancheta, zid de garda/ bench,wall guard – C25/30 elevatie, ziduri intoarse/ elevation, reverted walls
Armatura / reinforcement:	–S355 (PC 52; ø10–ø14) –S345 (PC 52; ø16)
Strat de acoperire/concrete cover	– min. 4cm expunere in aer/air exposed

NOTA/NOTE

Pentru mentinerea pozitiei corecte in timpul betonarii,
se vor monta distantieri minim 4buc./m².
Distantierii trebuie legati cu sarma de carcasa de armatura.

In order to maintain the correct position during concreting,
minimum 4pcs./m² distance pieces shall be mounted.
The distance pieces shall be connected to the reinforcing framework, using wire.

EXTRAS DE ARMARE

REINFORCEMENT TABLE

Marca	Diametrul	Numar bucati asemenea	Lungimea/bucata	Lungimi/diametre PC52				
				S355			S345	
				ø10mm	ø12mm	ø14mm	ø16mm	ø20mm
1	10	86	3.80	326.80				
1a	10	2	3.30	6.60				
1b	10	2	2.80	5.60				
1c	10	2	2.25	4.50				
2	10	105	4.90	514.50				
2a	10	5	3.50	17.50				
2b	10	5	1.30	6.50				
2c	10	5	2.50	12.50				
3	12	78	1.00		78			
4	10	78	1.25	97.50				
5	10	78	1.20	93.6				
6	10	8	1.80	14.40				
7	20	5	9.90					49.50
7a	20	5	4.65					23.25
8	14	20	4.40			88		
8a	14	20	9.65			193		
9	12	24	9.65		231.6			
9a	12	24	4.35		104.4			
10	10	176	1.05	184.80				
11	10	8	1.70	13.60				
12	10	8	2.10	16.80				
13	12	78	4.35		339.30			
13a	12	78	9.60		748.8			
14	12	86	4.25		365.5			
14a	12	1	2.60		2.60			
14b	12	1	2.25					
14c	12	1	4.15		4.15			
14d	12	1	4.05		4.05			
15	12	90	4.65		418.50			
16	16	124	1.40				173.60	
16a	16	90	1.40				126	
17	12	90	5.15		463.50			
17a	12	6	2.30		13.8			
18	16	2	5.45				10.9	
18a	16	2	5.55				11.10	
19	14	6	5.45			32.70		
19a	14	6	5.55			33.30		
20	14	3	3.55			10.65		
21	12	22	3.25		71.50			
21a	12	15	3.30		49.50			
22	10	28	2.45	68.60				
23	16	6	5.90				35.4	
23a	16	6	3.45				20.7	
24	10	10	2.95	29.50				
25	14	5	4.20			21.00		
26	14	1	4.15			4.15		
27	14	7	4.30			30.1		
28	14	30	2.75			82.5		
29	14	24	5.25			126		
30	14	4	6.55			26.2		
31	14	2	8.95			17.90		
31a	14	2	9.20			18.40		
31b	14	2	9.10			18.20		
32	16	1	4.60				4.60	
32a	16	1	4.70				4.70	
32b	16	1	4.80				4.80	
33	14	3	4.10				12.30	
33a	14	4	4.00			16		
34	14	6	4.70				28.20	
35	14	1	4.60			4.60		
36	14	7	4.70			32.90		
37	14	30	4.15			124.5		
38	14	27	3.95			106.65		
39	14	10	6.60			66		
40	14	14	5.05			70.7		
41	14	14	2.35			32.90		
42	10	80	0.95	76				
43	12	22	2.75		60.5			
43a	12	3	1.55		4.65			
44	12	26	1.60		41.60			
44a	12	11	1.40		15.40			
45	16	2	4.40				8.80	
45a	16	2	4.25				8.50	
46	14	6	4.30			25.80		
46a	14	6	4.20			25.20		
47	14	3	2.20			6.60		
48	14	2	3.00			6.00		
49	14	6	2.64			15.84		
50	14	4	2.00			8.00		
51	14	13	2.50			32.50		
52	14	2	2.40			4.80		
53	14	5	2.10			10.50		
54	14	2	4.35			8.70		
54a	14	2	3			6		
54b	14	2	3.25			6.50		
55	12	11	2.30		25.30			
55a	12	3	1.25		3.75			
56	14	4	1.75			7.00		
56a	14	3	1.80			5.40		
57	14	3	2.40			7.20		
58	14	5	1.95			9.75		
59	14	4	1.80			7.2		
60	14	3	1.60			4.8		
61	14	30	2.80			84		
62	14	9	1.50			13.50		
63	14	2	7.10			14.20		
64	16	1	2.80				2.80	
64a	16	1	2.90				2.90	
64b	10	1	3.00				3.00	
Lungimea / diametre (m)				1489.30	3048.65	1465.84	458.30	72.75
Greutatea/m (kg/m)				0.617	0.888	1.208	1.578	2.466
Greutatea/diametre (kg)				918.90	2707.20	1770.7	723.19	179.4
Greutatea totala (kg)				6299.39				
Greutatea rotunjita (kg)				6300				

Greutatea rotunjita pentru 2 culei (kg) = 12 600

NOTA

Culeea Sighisoara liniile 1 si 2 este asemanatoare cu aceasta culee

Se interzice copierea, difuzarea, imprumutarea sau utilizarea in alte scopuri, fara permisiunea AREX Lider Company ca proprietar al desenului.
This drawing is forbidden to be copied, lent or used in other purposes than those previously approved by AREX Lider Company as its owner.

D					
C					
B					
A					
Indice Index	Data Date	Modificare Modification/Revision	Proiectant Designer	Aprobat Consultant Approved Consultant	Aprobat CFR Approved CFR

GUVERNUL ROMANIEI
ROMANIAN GOVERNMENT

PROIECT FINANŢAT DE UNIUNEA EURO
EUROPEAN UNION FINANCED PR

C.N.C.F. "C.F.R." - S.A.

CLIENT / CLIENT

ITALFERR
GRUPPO FERROVIE DELLO STATO
Joint Venture leader

Scott Wilson

OBERMEYER
PLANEN + BERATEN GmbH

TECNIC
Consulting Engineers

CONSULTANT / CONSULTANT

			Data Date	Semnătură Signature
Aprobat Approved	Şef proiect Project manager	R. Liuzza		
Aprobat Approved	Coordonator Secţiune 1 Section 1 Coordinator	C. Gambelli		
Verificat Checked	Expert Cheie Checking Expert	V. Kallidromitis		

SUBCONTRACTANT / SUBCONTRACTOR

AREX

Aprobat Approved	Responsabil Subconsultant Subconsultant Responsible	A.Stanciu - Dinulescu	02.2012	
Întocmit Elaborated	Proiectant Designer	Constantin Miculete	02.2012	

Reabilitarea liniei de cale ferata Braşov - Simeria, parte componentă a coridorului IV Pan European, pentru circulaţia trenurilor cu viteza maximă de 160 km/h,
Tronsonul : Braşov - Sighişoara
Rehabilitation of the railway line Braşov - Simeria, component Part of the IV Pan-European Corridor, for the trains circulation with maximum speed of 160 km/h,
Section : Braşov - Sighişoara

Proiect/Project
2004/RO/16/P/PA/003

Faza / Phase:
D.E. / E.D.

Denumire desen / Drawing Title :

POD/BRIDGE Km.223+203,050 L=18.00m

PLAN ARMARE CULEEA BRASOV LINIILE 3 SI 4 (pod cale dubla)
BRASOV ABUTMENTS REINFORCEMENT railway track 3 and 4

Codificare / Codification System	Scara / Scale 1:20	LOT / LOT	Nr. / No 01 / 01

E A 5 1 | 0 1 | E | 1 1 | B C | P V | 0 2 | 3 | 2 | 0 1 0 | 0

594 X 5321