SECTIUNE TRANSVERSALA A-A/A-A CROSS SECTION

(prin axa c.f. II/thru raiway axis 2)

scara 1:25

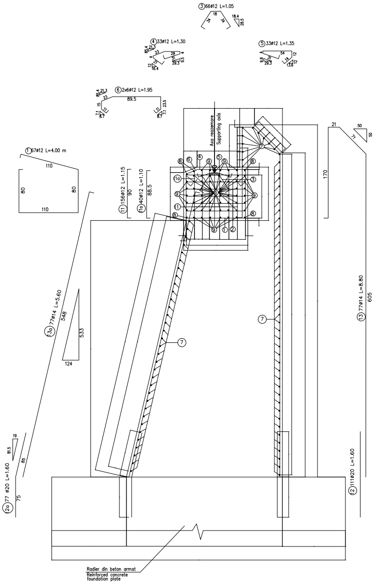
③66ø12 L=1.05
18
34
34
18.4
28.5
④33ø12 L=1.30
85.4
21.3
23
29
4
31
9.5
29.3
12
16.4
⑤33ø12 L=1.35
54
12
37
14
9.8
29.3
13.6
12
⑥2x6ø12 L=1.95
89.5
23.5
15
11
7.1
8.7
①67ø12 L=4.00 m
110
80
80
110
⑪156ø12 L=1.15
90
①a 40ø12 L=1.10
88.5
Axa reazemare
Supporting axis
⑬a 77ø14 L=5.60
548
533
124
②a 77 ø20 L=1.60
19
81.5
85
75
⑦
21
50
71
50
170
⑬77ø14 L=8.80
605
⑫111ø20 L=1.60
Radier din beton armat
Reinforced concrete foundation plate

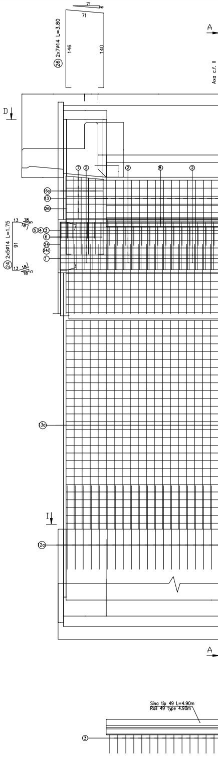
71
71
6
㉖2x7ø14 L=3.80
146
140
A
Axa c.f. II
D
⑦ ② ② ⑧ ②
⑥a
⑬
㉖
㉔2x5ø14 L=1.75
13
18
18
5
91
⑤④③
⑥
㉔
㉔a
①
③a
I
②a
A
Sina tip 49 L=4.90m
Rail 49 type 4.90m
③

VEDERE FRONTALA CULEE B-B/B-B FRONT VIEW

Sc. 1:25

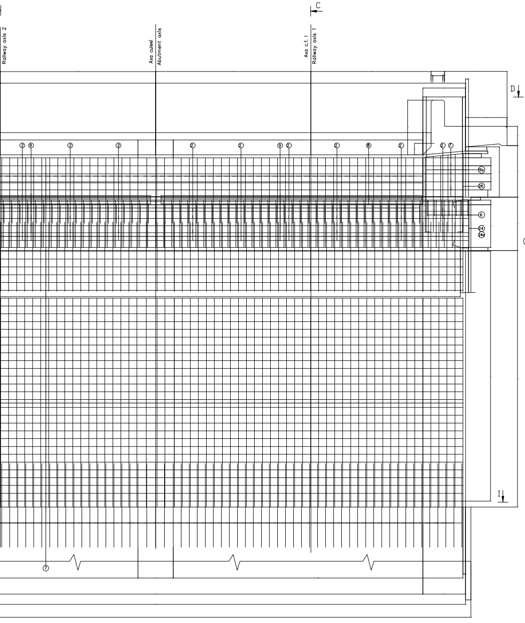
C
Railway axis 2
Axa culeei
Abutment axis
Axa c.f. I
Railway axis 1
D
② ⑨ ② ② ② ② ⑨ ② ② ⑧ ② ② ⑦
(6a)
(26)
⑥
(24)
(24)
⑦
I
C

SECTIUNE TRANSVERSALA C-C/C-C CROSS SECTION
(prin axa c.f. I/thru raiway axis 1)

scara 1:25

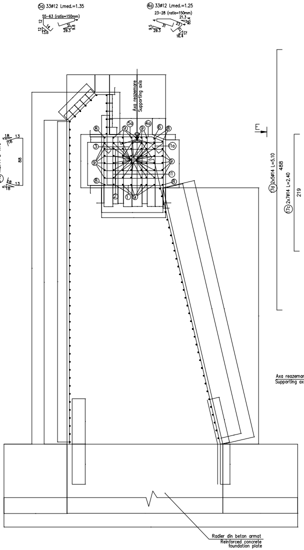
(5a) 33ø12 Lmed.=1.35
55-63 (ratio=150mm)
12
14
12
13.6
31
29.3
9.8
4
(4a) 33ø12 Lmed.=1.25
23-28 (ratio=150mm)
21.3
85.4
4
31
23
9.5
29.3
27
12
16.4
Axa reazemare
Supporting axis
(24a) 1x2ø14 L=1.70
18
13
88
⑥ (5a) ⑨ (4a) ⑥ ⑧
③
(1a)
⑨ ⑨
⑧ ⑪ ⑧
② ① ⑨
Radier din beton armat
Reinforced concrete foundation plate

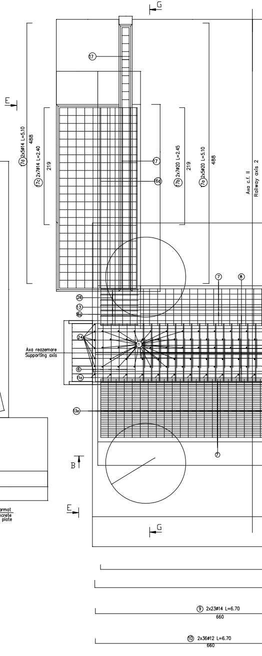
G
E
⑰
(7d) 2x5ø14 L=5.10
488
(17c) 2x7ø14 L=2.40
219
⑰
(6d)
(17b) 2x7ø20 L=2.45
219
(7a) 2x5ø20 L=5.10
488
Axa c.f. II
Railway axis 2
⑦ ⑧
(26)
⑬
(6a)
(24)
Axa reazemare
Supporting axis
⑥
(1a)
(13a)
⑦
B
E
G
⑨ 2x23ø14 L=6.70
660
⑩ 2x36ø12 L=6.70
660

DISPUNEREA ANCORELOR PE SINA DE REZEMARE
REINFORCEMENT ARRANGEMENT ON SUPPORTING RAIL

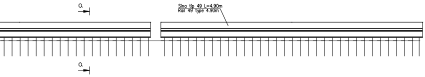
a
Sina tip 49 L=4.90m
Rail 49 type 4.90m
a

SECTIUNE a-a
a-a SECTIUNE

a3,5
EM IIB
18
34
34
③

VEDERE IN PLAN D-D/D-D PLAN VIEW

scara 1:25

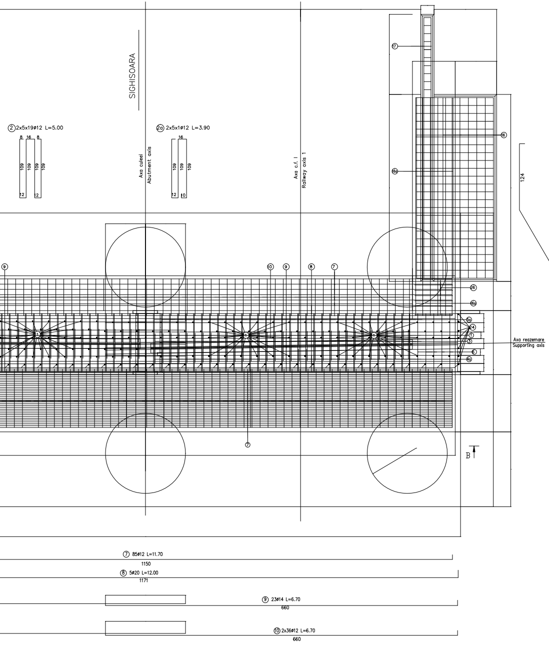
SIGHISOARA
② 2x5x19ø12 L=5.00
8 16 8
109 109 109 109
12 12
②a 2x5x1ø12 L=3.90
16
109 109 109
12 10
Axa culeei
Abutment axis
Axa c.f. I
Railway axis 1
⑰
⑯
⑥a
124
⑨
⑩ ⑨ ⑧ ⑦
㉖
⑥a
⑤a
㉔
①
③
⑥
④a
Axa reazemare
Supporting axis
⑦
B
⑦ 85ø12 L=11.70
1150
⑧ 5ø20 L=12.00
1171
⑨ 23ø14 L=6.70
660
⑩ 2x36ø12 L=6.70
660

VEDERE E-E/E-E VIEW

(la exterior/exterior side)

scara 1:25

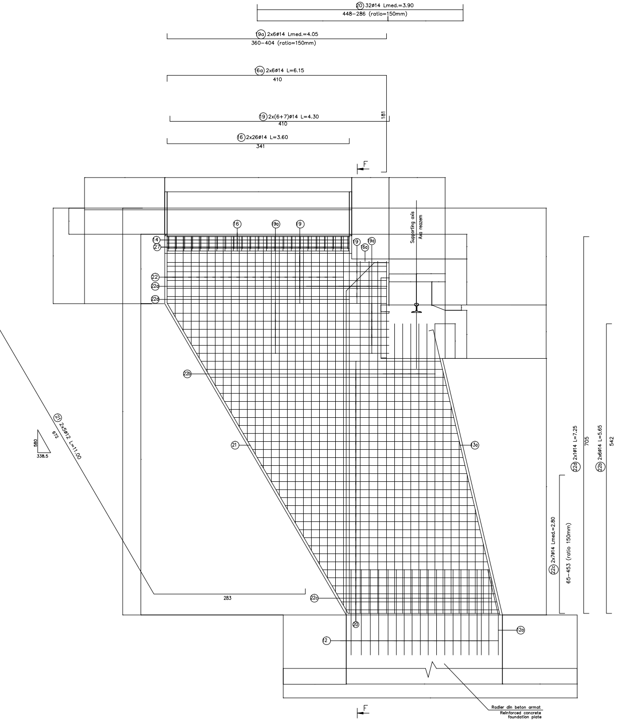
⑳ 32ø14 Lmed.=3.90
448-286 (ratio=150mm)
⑲a 2x6ø14 Lmed.=4.05
360-404 (ratio=150mm)
⑯a 2x6ø14 L=6.15
410
181
⑲ 2x(6+7)ø14 L=4.30
410
⑯ 2x26ø14 L=3.60
341
F
㉑ 2x5ø12 L=11.00
672
580
338.5
⑯ ⑲a ⑲
⑭
㉗
⑲ ⑲a
⑥a
Supporting axis
Axa reazem
㉒
㉒a
㉒a
㉒b
㉑
③a
283
㉒c
⑳
⑫
⑫a
㉒d 2x1ø14 L=7.25
705
㉒b 2x6ø14 L=5.65
542
㉒c 2x7ø14 Lmed.=2.80
65-453 (ratio 150mm)
Radier din beton armat
Reinforced concrete foundation plate
F

SECTIUNE F-F/F-F SECTION

scara 1:25

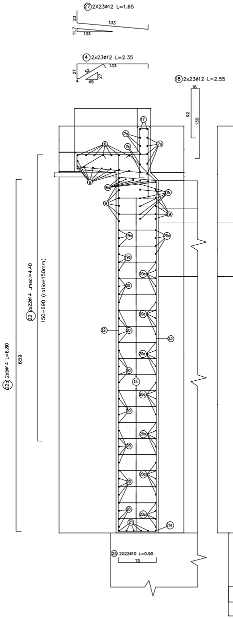

㉗ 2X23ø12 L=1.65
23
133
11.7
133
④ 2x23ø12 L=2.35
27
52
133
4
45
27
⑱ 2x23ø12 L=2.55
16
92
130
⑰
7a
7a
6
7b
6
6a
7b
9
9
19a
20a
19a
20a
20
20a
22
20
23
20a
20
15
20a
20
20a
20
20a
20
20
20a
21
21a
㉕ 2X22ø10 L=0.90
70
㉒ 2x22ø14 Lmed.=4.40
150-690 (ratio=150mm)
22a 2x5ø14 L=6.80
659

VEDERE G-G/G-G VIEW

(la interior/interior side)

scara 1:25

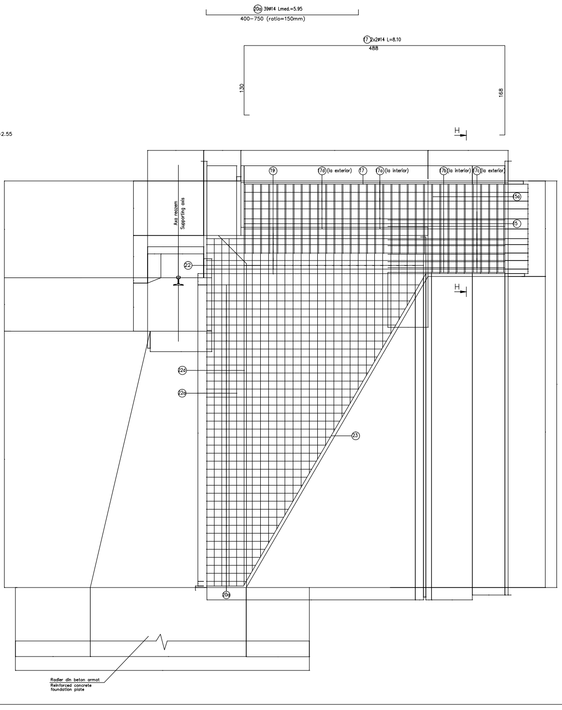

20a 39ø14 Lmed.=5.95
400-750 (ratio=150mm)
⑰ 2x2ø14 L=8.10
488
130
168
H
⑲
17d (la exterior)
⑰
17a (la interior)
17b (la interior)
17c (la exterior)
15a
⑮
Axa reazem
Supporting axis
㉒
22a
22a
㉓
20a
H
Radier din beton armat
Reinforced concrete foundation plate

SECTIUNE H-H/H-H SECTION

scara 1:25

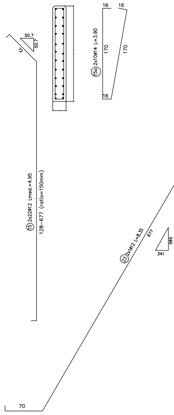

50.7
50.7
72
16
16
15a 2x10ø14 L=3.90
170
170
16
⑮ 2x22ø12 Lmed.=4.95
128-677 (ratio=150mm)
㉓ 2x1ø12 L=8.35
677
585
341
70

EXTRAS DE ARMATURA PENTRU UN TABLIER TABLIER TABLE OF REINFORCEMENTS FOR ONE RAILWAY DECK						
Marca Position	Diametru Diameter	Lung./buc.(m) Lenght/pcs.(m)	Nr.buc. No.pcs.	S355 ø12	S355 ø14	S345 ø20
1	12	4.00	67	268.00		
2	12	5.00	190	950.00		
2a	12	3.90	96	374.40		
3	12	1.25	66	82.50		
4	12	1.20	33	39.60		
4a	12	1.25	33	41.25		
5	12	1.35	33	44.55		
5a	12	1.35	33	44.55		
6	12	1.95	12	23.40		
7	12	11.70	85	994.50		
8	20	12.00	5			60.00
9	14	6.70	46		308.20	
10	12	6.70	72	482.40		
11	12	1.15	156	179.40		
11a	12	1.10	76	83.60		
12	20	1.60	111			177.60
12a	20	1.60	77			123.20
13	14	8.80	77		677.60	
13a	12	5.60	77		421.20	
14	12	2.35	46	108.10		
15	12	Lmed.=4.95	44	217.80		
15a	14	3.90	20		78.00	
16	14	3.60	52		187.20	
16a	14	6.15	12		73.80	
17	14	8.10	4		32.40	
17a	20	5.15	10			51.50
17b	20	2.45	14			34.30
17c	14	2.40	14		33.60	
17d	14	5.10	10		51.00	
18	12	2.55	46	117.30		
19	14	4.30	26		111.80	
19a	14	Lmed.=4.05	12		48.60	
20	14	Lmed.=3.90	32		124.80	
20a	14	Lmed.=5.95	39		232.05	
21	12	11.00	10	110.00		
22	14	Lmed.=4.40	44		193.60	
22a	14	6.80	26		111.80	
22b	14	5.65	12		67.80	
22c	14	Lmed.=2.80	14		39.20	
22d	14	7.25	2		14.50	
23	12	8.35	2	16.70		
24	14	1.75	10		17.50	
24a	14	1.70	2		3.40	
25	12	0.90	44	39.60		
26	14	3.80	14		53.20	
27	12	1.65	46	75.90		
Lungimi totale pe diametre/Lenght/Diameter (m)				4249.00	2881.25	446.60
Masa pe metru / Weight/meter (kg/m)				0.888	1.208	2.466
Masa pe diametre / Weight/Diameter (kg)				3773.10	3480.55	1101.30
Masa pe tip otel / Weight/Steel Type (kg)				3773.10	3480.55	1101.30
Masa totala tablier / Total Weight				(kg) 8354.95		
Pierderi 5% / Steel Loss 5%				(kg) 445.05		
Masa totala pentru un tablier (kg) Total Weight for one deck (kg)				8800.00		

NOTA

1. La executie se vor respecta cu strictete prevederile din "Normativ pentru producerea betonului si executarea lucrarilor din beton, beton armat si beton precomprimat. Partea 1: Producerea betonului", indicativ NE 012/1-2007 si "Normativ pentru producerea betonului si executarea lucrarilor din beton, beton armat si beton precomprimat. Partea 2: Executarea lucrarilor din beton", indicativ NE 012/2-2010, iar verificarea calitatii lucrarilor si receptionarea lor se va face conform normativului C56-1985.
2. Constructia se incadreaza in categoria de importanta B (constructii de importanta deosebita), modelul 1 de asigurare a calitatii si clasa de importanta B, conform HG 766/1997.
3. Proiectul va fi verificat la exigentele A4.2; B2.2; D2.2.

NOTE

1. The execution will strictly comply with the provisions of "Practice code for the concrete production and works execution, reinforced and pre-stressed concrete - Part 1: Practice code for concrete production" NE 012/1-2007 and "Practice code for the concrete production and works execution, reinforced and pre-stressed concrete - Part 2: The execution of concrete works." NE 012/2-2010, and the quality and the reception of the works shall be made accordingly to Norm C 56-1985.
2. The construction has been classified in B category of Importance (high important constructions), model 1-ensuring the quality and class of importance B according to G.O. 766/97.
3. The project will be checked in order to comply with the A4.2; B2.2; D2.2 requirements.

IMPORTANT

1. Pentru mentinerea pozitiei corecte in timpul betonarii, se vor monta distantieri minim 4buc./m^2. Distantierii trebuie legati cu sarma de carcasa de armatura.
2. Barele marca 6 si 7 se vor ancora in betonul de protectie al hidroizolatiei.

IMPORTANT

1. In order to maintain the correct position during concreting, minimum 4pcs./m^2 distance pieces shall be mounted. The distance pieces shall be connected to the reinforcing framework, using wire.
2. Armature steel position 6 and 7 shall be anchor in the waterfroofing protection concrete.

Beton: Concrete:	- C35/45 beton armat in bancheta cuzinetilor/ reinforced concrete in the cushion bench - C25/30 beton armat in fundatiile indirecte ale culeilor/ reinforced concrete in abutment foundations
Armatura: Reinforcement:	- PC52 (STAS 438/1-89); S355, S345
Strat de acoperire: Concrete cover	- min. 4cm expunere in aer/min. 4cm air exposed
Clasa de incarcare: Load class:	- convoiul UIC(LM71 si SW/0), P10 (STAS 3220-89)
Cofraj: Formwork:	- Metal sau lemn/Steel or wood

SECTIUNE I-I/I-I SECTION

scara 1:25

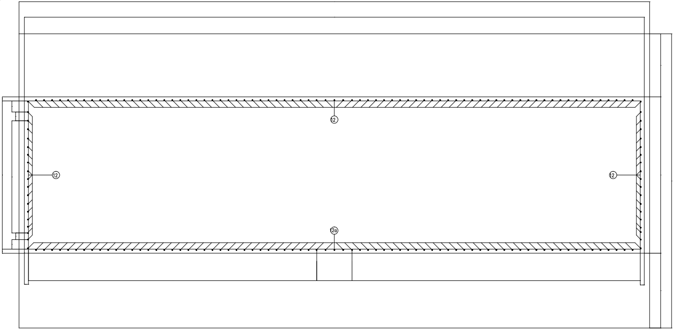

Se interzice copierea, difuzarea, imprumutarea sau utilizarea in alte scopuri, fara permisiunea AREX *Lider* Company ca proprietar al desenului.
This drawing is forbidden to be copied, lent or used in other purposes than those previously approved by AREX *Lider* Company as its owner.

Indice Index	Data Date	Modificare Modification/Revision	Proiectant Designer	Aprobat Consultant Approved Consultant	Aprobat CFR Approved CFR
D					
C					
B					
A					

GUVERNUL ROMANIEI
ROMANIAN GOVERNMENT

PROIECT FINANȚAT DE UNIUNEA EUROPEANĂ
EUROPEAN UNION FINANCED PROJECT

CLIENT / CLIENT

C.N.C.F. "C.F.R." - S.A.

ITALFERR GRUPPO FERROVIE DELLO STATO Joint Venture Leader
Scott Wilson
OBERMEYER PLANEN + BERATEN GmbH
TECNIC Consulting Engineers

CONSULTANT / CONSULTANT

			Data Date	Semnătură Signature
Aprobat Approved	Şef proiect Project manager	R. Liuzza		—
Aprobat Approved	Coordonator Secţiune 1 Section 1 Coordinator	C. Gambelli		—
Verificat Checked	Expert Ofsite Checking Expert	V.Kallidromitis		—

SUBCONTRACTANT / SUBCONTRACTOR

Aprobat Approved	Responsabil Subcontractant Subcontractant Responsible	A. Dinulescu Stanciu	02.2012	—
Întocmit Elaborated	Proiectant Designer	Valentin Florea	02.2012	

Reabilitarea liniei de cale ferata Brasov - Simeria, parte componentă a coridorului IV Pan European, pentru circulaţia trenurilor cu viteza maximă de 160 km/h,
Tronsonul : Brasov - Sighisoara
Rehabilitation of the railway line Brasov - Simeria, component Part of the IV Pan-European Corridor, for the trains circulation with maximum speed of 160 km/h,
Section : Brasov - Sighisoara

Proiect/Project
2004/RO/16/P/PA/003

Faza / Phase:
P.Th. / T.D.

Denumire desen / Drawing Title :

STATIA / STATION RACOS
VIADUCT KM 220+762.626
PLAN ARMARE CULEE / ABUTMENTS REINFORCEMENT PLAN

Codificare / Codification System	Scara / Scale 1:100	LOT / LOT	Nr. / No 01 / 01

EA51 01 E 11 BC PV 02 1 0 016 0

594x3535