ELEVATIE A–A
ELEVATION A–A
scara 1:100

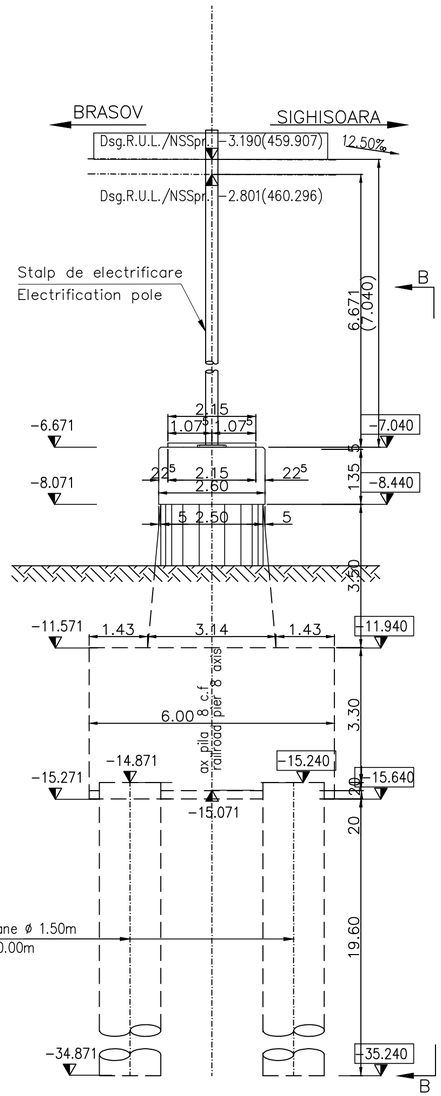

VEDERE LATERALA B–B
SIDE VIEW B–B
scara 1:100

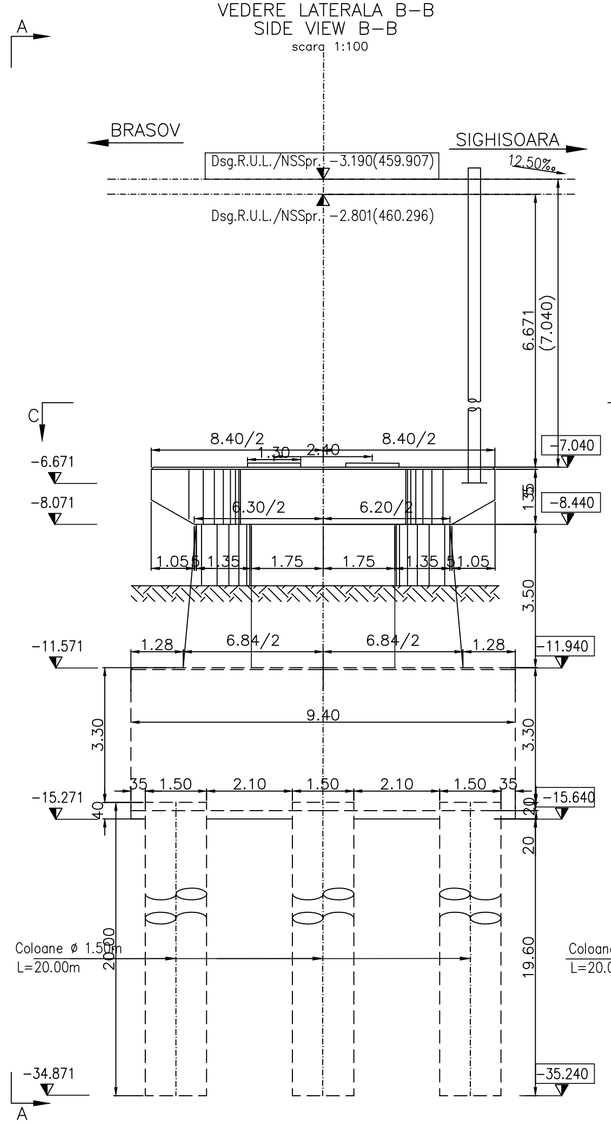

SECTIUNE D–D
SECTION D–D
scara 1:100

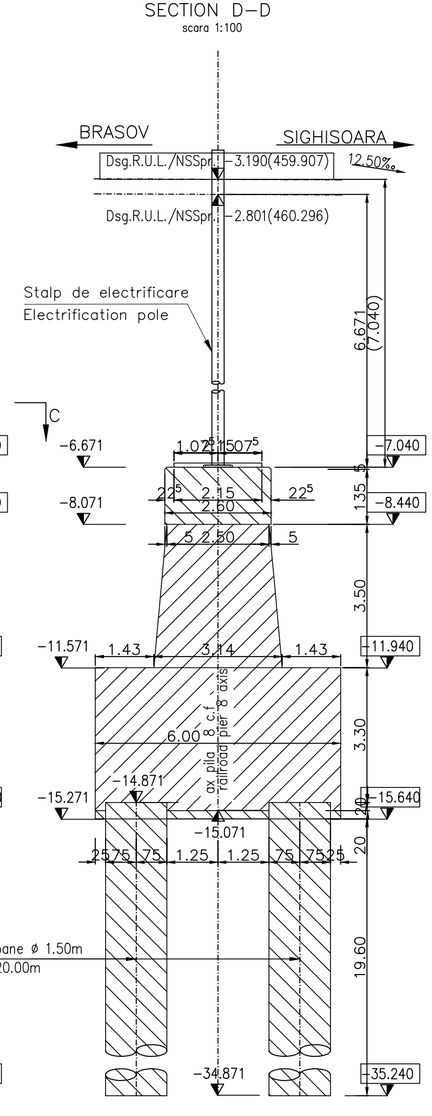

SECTIUNE C–C
SECTION C–C
scara 1:100

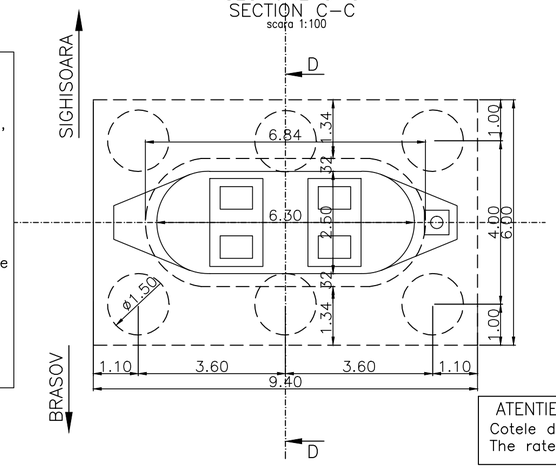

NOTA:
1. Prezentul plan s–a intocmit in conformitate cu dispozitia generala
2. La executie se vor respecta cu strictete prevederile NORMATIVULUI NE 012/2–2010 Cod de practica pentru executarea lucrarilor din beton, beton armat si beton precomprimat–(partea I –beton si beton armat).
3. Verificarea calitati constructiei si receptionarea lucrarilor ascunse se vor face conform Normativului C 56–85.
4. Convoiul de calcul pentru infrastructura este UIC (LM71 si SW/2).

NOTE:
1. This plan has been drawn up according to the general disposition.
2. During the works the provisions in NORM 012/2–2010: Practice Code for concrete, reinforced concrete and pre–stressed concrete walls (part 1 –concrete and reinforced concrete).
3. The works quality checking and their acceptance shall be made according to Norm C56–1985.
4. The infrastructure complies with the calculation convoy UIC (LM71 si SW/2).

ATENTIE/ATENTION
Aprovizionarea aparatelor de reazem se va face inaintea executari cuzinetilor si a banchetei acestora. In cazul in care inaltimea aparatelor de reazem aprovizionate difera fata de cea considerata in proiect se vor modifica inaltimile pe reazem corespunzator cu noile aparate.
The bearing blocks shall be supplied before building the bearings and their seats. In case the height of the supplied bearing blocks differs from that given in the project, the heights on the seats shall be adjusted so as to comply with the new devices.

ATENTIE/ATENTION
Cotele din paranteza apartin pilei 9 de pe linia I.
The rates of bracket maintained to pier 9 of railway I.

LEGENDA BETOANELOR/CONCRETE LIST

Beton armat în cuzineti si in bancheta cuzinetilor
Reinforced concrete in the cushions and cushions bench
C 35/45–CEM I/A–S 52,5–(XC4+XF3+XA2)–A/C=0,50–D_{max}16–Cl 0,20

Beton armat in fundati indirecte(coloane si radiere) si in elevati:
Plain concrete in abutments foundations:
C 25/30–CEM H i/A–S 42,5–(XC4+XF3)–A/C=0,50–D_{max}32–Cl 0,20

Beton de egalizare
Concrete in the protection layer of the waterproofing
C 25/30–CEM i/A–S 32,5–(XF3)–A/C=0,55–D_{max}16–Cl 0,20

In cazul in care temperatura in timpul turnari este scazuta, se vor folosi cimenturile cu rezistenta initiala mare, R si aditivi acceleratori, iar in cazul turnari pe timp calduros, cimenturile cu rezistenta initiala uzuala, N si aditivi intarzietori (conf.NE 012/2–2010 si tabelului 2 din SR EN 197–1:2002)
When the temperature during the casting is low, cements with high initial resistance, R and accelerating additives shall be used and when it is cast during warm weather, cements with common initial resistance, N and delaying additives shall be used (according the norm NE 012/2–2010 and table 2 for the SR EN 197–1: 2002).

This drawing is forbidden to be copied, lent or used in other purposes than those previously approved by AREX *Lider* Company as its owner.
Se interzice copierea, difuzarea, imprumutarea sau utilizarea in alte scopuri, fara permisiunea AREX *Lider* Company ca proprietar al desenului.

Indice Index	Data Date	Modificare Modification/Revision	Proiectant Designer	Aprobat Consultant Approved Consultant	Aprobat CFR Approved CFR
D					
C					
B					
A	12.2011	Revizia 1 1 Revision	Dinu Andreea		

GUVERNUL ROMANIEI
OMANIAN GOVERNMENT

PROIECT FINANŢAT DE UNIUNEA EUROPEANĂ
EUROPEAN UNION FINANCED PROJECT

CLIENT / CLIENT

C.N.C.F. "C.F.R." - S.A.

ITALFERR GRUPPO FERROVIE DELLO STATO *Joint Venture leader* · Scott Wilson · OBERMEYER PLANEN + BERATEN GmbH · TECNIC Consulting Engineers

CONSULTANT / CONSULTANT

			Data Date	Semnătura Signature
Aprobat Approved	Şef proiect Project manager	R. Liuzza		
Aprobat Approved	Coordonator Secţiune 1 Section 1 Coordinator	C. Gambelli		
Verificat Checked	Expert Cheie Checking Expert	V.Kallidromitis		

SUBCONTRACTANT / SUBCONTRACTOR

Aprobat Approved	Responsabil Subconsultant Subconsultant Responsible	A. Dinulescu Stanciu	11.2011	
Întocmit Elaborated	Proiectant Designer	Dinu Andreea	11.2011	

Reabilitarea liniei de cale ferata Braşov - Simeria, parte componentă a coridorului IV Pan European, pentru circulaţia trenurilor cu viteza maximă de 160 km/h, **Tronsonul : Braşov - Sighişoara**
Rehabilitation of the railway line Braşov - Simeria, component Part of the IV Pan-European Corridor, for the trains circulation with maximum speed of 160 km/h, **Section : Braşov - Sighişoara**

Proiect/Project
2004/RO/16/P/PA/003

Faza / Phase:
P.Th. / T.D.

Denumire desen / Drawing Title:

INTERVAL / SECTION RACOS–CATA
VIADUCT L=413.70m km 232+366.738/PLAN COFRAJ PILA 8 SI PILA 9 LINIA I
VIADUCT L=413.70m km 232+366.738/PIER 8 AND 9 FORMWORK PLAN RAILWAY I

Codificare / Codification System	Scara / Scale 1:100	LOT / LOT	/ No 01 / 01
E A 5 1 0 1 E 1 2 B B P V 0 2 3 2 0 0 9 1			