ELEVATIE
ELEVATION
scara 1:100

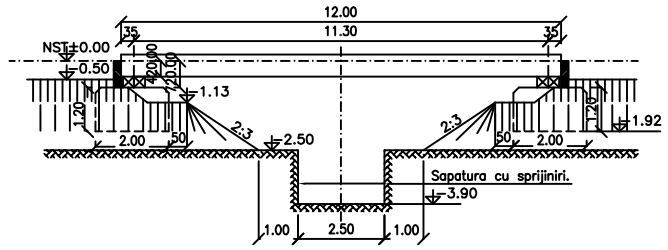

ELEVATIE
ELEVATION
scara 1:100

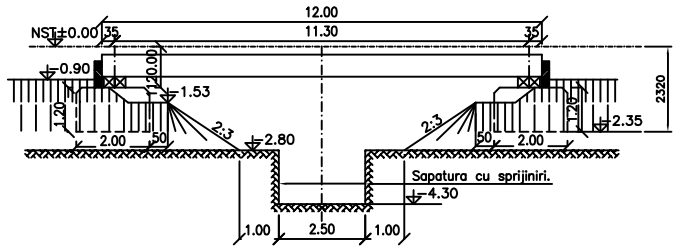

P L A N
scara 1:100

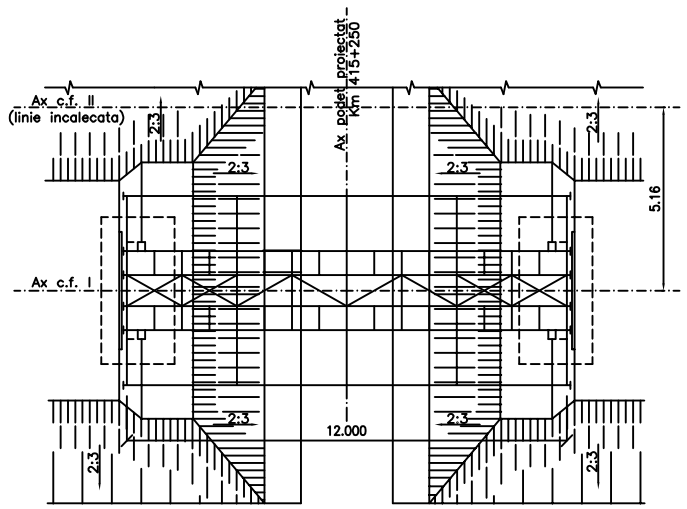

SECTIUNE TRANSVERSALA
CROSS SECTION
IN CAMP — IN THE CENTRAL PART

PE REAZEM — ON THE SUPPORT

scara 1:50

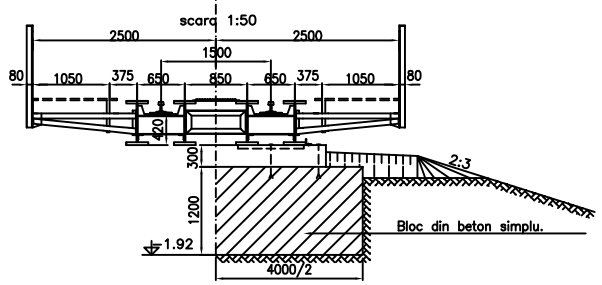

SECTIUNE TRANSVERSALA
CROSS SECTIONS
IN CIMP — CENTRAL PART

PE REAZEM — ON THE SUPPORT

Sc. 1:50

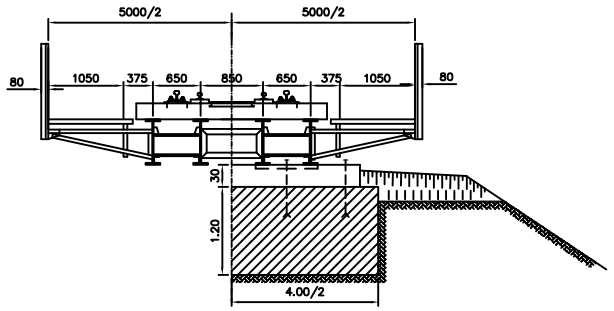

LEGENDA BETOANELOR
CONCRETE LIST

Beton simplu in fundatie
Plain concrete in the foundation
C25/30–CEM II/A–S 32,5–(XF1)–A/C=0,50–Dmax 32–Cl 0.20

MATERIAL OL 37–EP

NOTA

1. Suprastructura se va alcatui din elemente metalice de inventar, asamblate in buloane conform planului de montaj.
2. Pe tablier sinile se pot aseza fie direct pe diafragme (pod cu grinzi gemene), fie pe traverse rezemate pe talpa superioara a grinzilor (pod cu calea sus), in functie de inaltimea de constructie disponibila si in functie de forma liniei in plan (aliniament sau curba).
3. Culeile se vor executa din blocuri de beton monolite/prefabricate. Adancimea de fundare se va alege in functie de natura si presiunea admisibila a terenului. Este necesar sa se stabileasca prin studii geotehnice caracteristicile mecanice ale pamanturilor pe care urmeaza a se construi culeele podului provizoriu pentru a se verifica daca nu exista pericolul de a se produce tasari prin pierderea stabilitatii intregii culei datorita lunecarii prismului de pamant pe care reazema ea. In cazurile in care exista pericolul de a se produce o astfel de alunecare, sau in cazul in care prin epuismentele efectuate in groapa de fundatie ar putea produce antrenari de particule fine, care ar pericita stabilitatea reazemelor podului provizoriu, se vor lua masuri speciale de prevenire.
4. Culeile executate in terasamente se vor realiza fie in inchidere de linie, fie sub protectia unor podete provizorii.
5. Dupa introducerea podului provizoriu, primele convoaie vor circula cu restrictie de viteza. Primul convoi cu viteza de 5 km/h si apoi in urmatoarele 24 ore cu 15 km/h, timp in care podul se va tine sub supraveghere si se vor remedia eventualele tasari.
6. La completarea umpluturilor, inainte de desfiintarea podului provizoriu, pamantul de umplutura va fi bine compactat. La partea superioara (pe cca. 1.20m inaltime) unde compactarea nu este posibila din cauza existentei suprastructurii podului provizoriu, umplutura se va completa dupa scoaterea acestuia din amplasament.
7. Pe podul provizoriu si la capetele acestuia nu se admit joante ale sinii. Prima joanta trebuie sa se afle la o distanta de minim 3.00m in spatele culeii.
8. La aplicarea tipului de suprastructura provizorie cu grinzi gemene se va folosi pe pod exclusiv sina tip 49. In cazul in care pe terasament sinile sunt de alt tip, se vor executa racordarile corespunzatoare.
Podul provizoriu se va tine coninuu sub observatie si in cazul in care se vor observa defectiuni ca: tasari, crapaturi in teren care marcheaza aparitia fenomenului de afuiere, vibratii sau sageti mari, se vor lua masuri urgente de remediere, iar pana la inlaturarea cauzei care aprovocat defectiunea se va inaspri restrictia de viteza.

NOTE

1. The superstructure shall be made up of inventory steel elements, assembled with bolts complying with the mounting plan.
2. The rails on the deck may be placed either directly on the diaphragms (bridge with twin girders), or on sleepers resting on the upper flange of the girders (upper track), depending on the available construction height and on the form of the line in plan (alignment or curve).
3. The abutments shall be made out of cast in plain concrete blocks or prefabricated. The foundation depth shall be chosen depending on the nature and allowable bearing pressure of the ground. Is necessary to establish, based on geo–technical studies, mechanical characteristics of the ground, where the abutments of the temporary bridge shall be built. In all cases it is also necessary to check if there is no danger the earth to lower down, affecting the stability of the entire abutment due to the sliding of the earth prism the abutment rests.
Where this danger exists or where the foundation hole de–watering may wash off the fine particles bringing about the endangering of the stability of the temporary bridge bearings, special measures to prevent it shall taken.
4. The abutments in the embankment shall be built either by closing the traffic on the line or by mounting some temporary culverts.
5. After mounting the temporary bridge, the first train sets shall run at restricted speed. The first train set at
S=5 km/h and then, within the next 24 hours at S=15 km/h. During this period the bridge shall be thoroughly supervised, repairing any possible subsidence of the ground.
6. When completing the fillings, before taking out the temporary bridge, the filling earth shall be well compacted. At the upper part (for about. 1.20m high) where the compaction is not possible due to the temporary bridge superstructure, the filling shall be completed after taking it out of the location.
7. Rail joints are not allowed on the temporary bridge and at its ends. The first joint shall be placed at minimum 3.00m behind the abutment.
8. When mounting the temporary superstructure with twin girders, on the bridge there shall be used only (exclusively) rail types 49. In case the rails on the embankment are of another type, appropriate connections shall be made.
The temporary bridge shall be continuously supervised to see if one of the following situations appear: ground subsidence, cracks, signaling the erosion phenomena, vibrations or large deflections to take urgent repairing measures or taken strict measures to reduce even more the traveling speed.

This drawing is forbidden to be copied, lent or used in other purposes than those previously approved by AREX *Lider* Company as its owner.
Se interzice copierea, difuzarea, imprumutarea sau utilizarea in alte scopuri, fara permisiunea AREX *Lider* Company ca proprietar al desenului.

CONVOI DE CALCUL 0,9 T8,5

Indice Index	Data Date	Modificare Modification/Revision	Proiectant Designer	Aprobat Consultant Approved Consultant	Aprobat CFR Approved CFR
D					
C					
B					
A	12.2011	Revizia 1	Carmen Balan		

GUVERNUL ROMANIEI
ROMANIAN GOVERNMENT

PROIECT FINANTAT DE UNIUNEA EURO
EUROPEAN UNION FINANCED PR

CLIENT / CLIENT

C.N.C.F. "C.F.R." - S.A.

ITALFERR GRUPPO FERROVIE DELLO STATO Joint Venture leader — Scott Wilson — OBERMEYER PLANEN + BERATEN GmbH — TECNIC Consulting Engineers

CONSULTANT / CONSULTANT

			Data Date	Semnătură Signature
Aprobat Approved	Şef proiect Project manager	R. Liuzza		
Aprobat Approved	Coordonator Secţiune 1 Section 1 Coordinator	C. Gambelli		
Verificat Checked	Expert Cheie Checking Expert	V.Kallidromitis		

SUBCONTRACTANT / SUBCONTRACTOR

Aprobat Approved	Responsabil Subconsultant Subconsultant Responsible	A. Dinulescu Stanciu	11.2011	
Întocmit Elaborated	Proiectant Designer	Carmen Balan	11.2011	

Reabilitarea liniei de cale ferata Braşov - Simeria, parte component a a coridorului IV Pan European, pentru circulaţia trenurilor cu viteza maxim a de 160 km/h,
Tronsonul : Braşov - Sighişoara
Rehabilitation of the railway line Braşov - Simeria, component Part of the IV Pan-European Corridor, for the trains circulation with maximum speed of 160 km/h,
Section : Braşov - Sighişoara

Proiect/Project 2004/RO/16/P/PA/003

Faza / Phase: P.Th. / T.D.

Denumire desen / Drawing Title :

Pod provizoriu G12 - Dispozitie Generala

G12 Provisory bridge - General Layout

Codificare / Codification System	Scara / Scale 1:100; 1:50	LOT / LOT	Nr. / No 01 / 01
E A 5 1 0 1 E 0 0 B A P O 0 0 0 0 0 1 6 0			