SECTIUNE A–A
A–A CROSS SECTION
Sc. 1:100

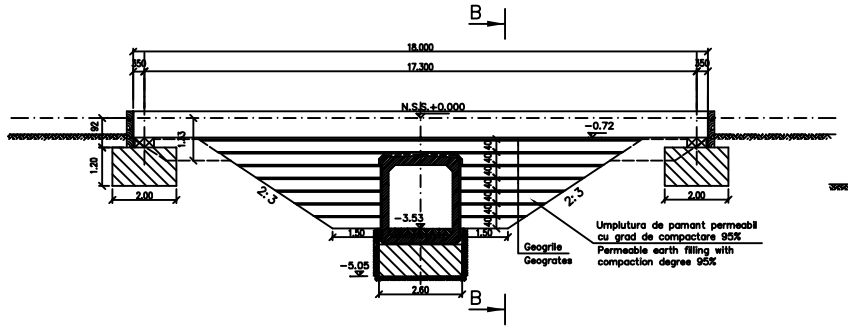

VEDERE PLANA
PLAN VIEW
Sc. 1:100

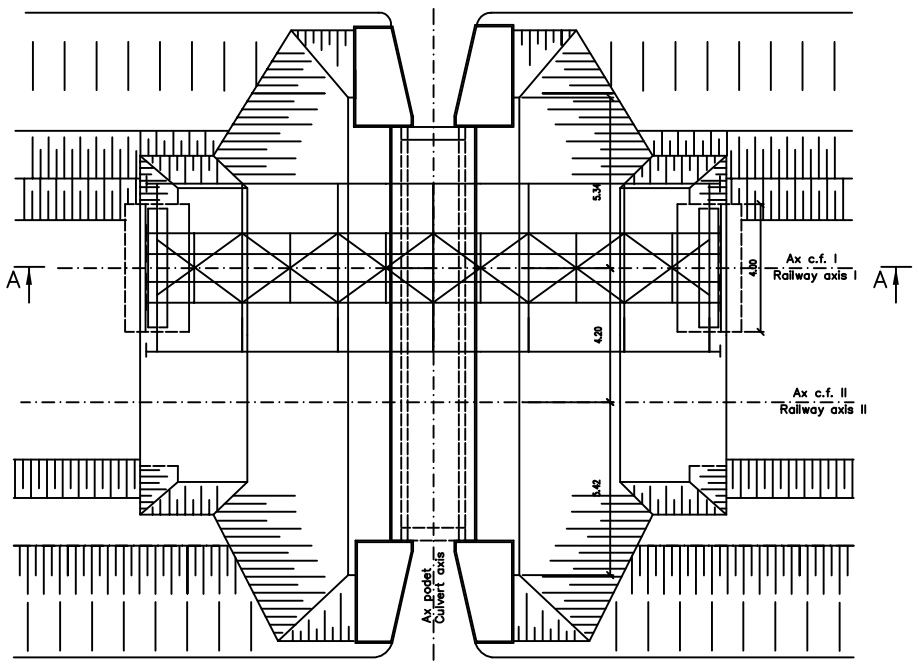

SECTIUNE B–B
B–B CROSS SECTION
Sc. 1:100

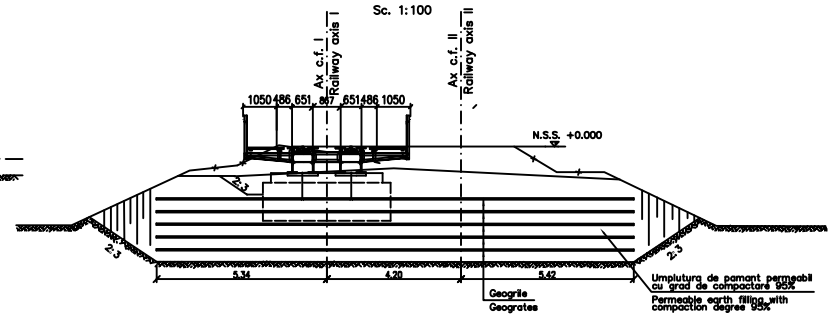

PROCES TEHNOLOGIC

Lucrarile se executa cu inchiderea totala a circulatiei de pe linia II.
1. Circulatia cu restrictie de viteza Vmax=30 Km/h pe linia I:
   –se vor monta podetele provizorii U5 pe linia I, in vederea executarii fundatiilor podului provizoriu G12/G15/G18;
   –se vor executa sapaturile cu sprijiniri pentru fundatiile podului provizoriu:
   –se vor executa fundatiile de beton ale podului provizoriu.
2. Inchiderea circulatiei pe linia I si scoaterea acesteia de sub tensiune:
   –se va introduce in cale podul provizoriu G12/G15/G18.
3. Circulatia cu restrictie de viteza Vmax=30 Km/h, pe linia I:
   –se va executa sapatura la adapostul podului provizoriu G12/G15/G18;
   –se vor demola elevatiile podetului, aripilor si fundatiile acestora, in amonte si aval, pe ambele linii (linia I cu pod provizoriu si linia II inchisa);
   –se vor executa sapaturile cu sprijiniri pentru fundatiile noi ale podetului si pentru fundatiile racordarilor din amonte si avalpe ambele linii (linia I cu pod provizoriu si linia II inchisa);
   –se vor executa fundatiile de beton ale podetului si racordarile din amonte si aval, pe ambele linii (linia I cu pod provizoriu si linia II inchisa);
   –se executa elevatiile aripilor prefabricate din amonte si din aval, pe ambele linii (linia I cu pod provizoriu si linia II inchisa);
   –se va incepe refacerea terasamentului din zona podetului, prin compactarea straturilor de pamant si montarea geogrilelor pina la limita la care permite podul provizoriu pe ambele linii (linia I cu pod provizoriu si linia II inchisa);
   –se definitiveaza podetul pentru linia II.
4. Inchiderea circulatiei pe linia I si scoaterea acesteia de sub tensiune:
   –se va scoate din cale podul provizoriu G12/G15/G18;
   –se va reface terasamentul pina la N.S.S.
5. Circulatia cu restrictie de viteza Vmax=30 Km/h pe ambele linii:
   –se vor introduce in cale podetele provizorii U5 in vederea demolarii fundatiilor podului provizorii G12/G15/G18;
   –se vor demola fundatiile si se va reface terasamentul;
6. Circulatia cu viteza normala pe liniile I si II:
   –se va executa radierul dintre aripi;
   –se vor executa blocajele de anrocamente la capetele podetului;

Dupa introducerea in cale a podului provizoriu, primele convoaie vor circula cu restrictie de viteza, primul convoi cu V=5Km/h si apoi, in urmatoarele 24 h cu V=10 Km/h, timp in care podul provizoriu se tine sub supraveghere si se vor remedia eventualele tasari.
Podul provizoriu se va tine continuu sub observatie, iar daca se vor observa defectiuni ca tasari, cazaturi de teren, care marcheaza aparitia fenomenului de instabilitate si vibratii sau sageti mari se vor lua masuri urgente de remediere, iar pina la inlaturarea cauzei care
a provocat defectiunea se va inaspri restrictia de viteza.

TECHNOLOGICAL PROCESS

The works are carried out with total closing of the traffic on track II.
1. Traffic with the speed restriction Smax=30 Km/h on track I:
   –there will be mounted U5 provisory culverts on track II,in order to execute the foundations of G12/G15/G18 provisory bridge;
   –there will be executed the excavations for the provisory bridge foundations, with propping ups;
   –there will be built the concrete foundations of the provisory bridge.
2. The traffic closing on tracks I and its detensioning:
   –it will be introduced G12/G15/G18 provisory bridge in the track on the line I.
3. Traffic with speed restriction Smax=30 Km/h on the track I:
   –there will be executed excavations under the protection of G12/G15/G18 provisory bridge;
   –there will be demolished the culvert, wings and their foundations upstream and downstream;
   –there will be executed the excavations for the new foundations of culvert and connections from upstream and downstream with propping ups;
   –there will be built the concrete foundations of culvert and connections from upstream and downstream;
   –there will be built the prefabricated elements elevations;
   –it will be started the remaking of the embankment in the culvert area, compacting the earth layers and mounting the geogrates up to the limit allowed by the provisory bridge;
   –the culvert on track II will be finished.
4. Closing the traffic tracks I and its detensioning:
   –G12/G15/G18 provisory bridge will be taken out of the track;
   –it will be rebuilt the embankment up to U.S.R.
5. Traffic with speed restriction Smax=30 Km/h on tracks I:
   –U5 provisory culverts will be introduced in track in order to demolish the foundation of G12/G15/G18 provisory bridge;
   –there will be demolished the foundations and rebuilt the embankment.
6. Traffic with normal speed on tracks I and II:
   –it will be built the stone packing between the wings;
   –there will be built the rockfills blockings at the culvert ends.

After the provisory bridge introducing in track, the first convoy will run with speed restriction, the first convoy with S=5 Km/h and then in the next 24 hours with S=10 Km/h, while the provisory bridge is supervised and there will be remedied possible setlements.
The provisory bridge will be countinously keept under observation and if there will be noticed defects as settlements, land slidings showing the appearance of the instability phenomenon and vibrations or big deflections, there will be taken urgent repairing measures and till there will be eliminated the defect cause, the speed restriction will be increased.

LEGENDA BETOANELOR
CONCRETE LIST

Beton simplu in fundatiile elementelor prefabricate si ale podurilor provizorii
Plain concrete in the prefabricated elements foundations and in the provisory bridges foundations
C25/30–CEM II/A–S 32,5–(XF1)–A/C=0,50–Dmax 32–Cl 0.20

Beton in elementele prefabricate
Concrete for prefabricated elements
C35/45–CEM II/A–S32,5–(XC4+XF3+XA1)–A/C=0,50–Dmax22–Cl0.20

This drawing is forbidden to be copied, lent or used in other purposes than those previously approved by AREX Āder Company as its owner.
Se interzice copierea, difuzarea, imprumutarea sau utilizarea in alte scopuri, fara permisiunea AREX Āder Company ca proprietar al desenului.

Indice / Index	Data / Date	Modificare / Modification/Revision	Proiectant / Designer	Aprobat Consultant / Approved Consultant	Aprobat CFR / Approved CFR
D					
C					
B					
A					

GUVERNUL ROMANIEI
ROMANIAN GOVERNMENT

PROIECT FINANŢAT DE UNIUNEA EURO
EUROPEAN UNION FINANCED PR

CLIENT / CLIENT

C.N.C.F. "C.F.R." - S.A.

ITALFERR GRUPPO FERROVIE DELLO STATO
Joint Venture leader
Scott Wilson
OBERMEYER PLANEN + BERATEN GmbH
TECNIC Consulting Engineers

CONSULTANT / CONSULTANT

			Data / Date	Semnătură / Signature
Aprobat / Approved	Şef proiect / Project manager	R. Liuzza		
Aprobat / Approved	Coordonator Sec tiune 1 / Section 1 Coordinator	C. Gambelli		
Verificat / Checked	Expert Cheie / Checking Expert	V.Kallidromitis		

SUBCONTRACTANT / SUBCONTRACTOR

Aprobat / Approved	Responsabil Subconsultant / Subconsultant Responsible	A. Dinulescu Stanciu	11.2011	
Întocmit / Elaborated	Proiectant / Designer	Carmen Balan	11.2011	

Reabilitarea liniei de cale ferata Braşov - Simeria, parte componentă a coridorului IV Pan European, pentru circulaţia trenurilor cu viteza maximă de 160 km/h,
Tronsonul : Braşov - Sighişoara
Rehabilitation of the railway line Braşov - Simeria, component Part of the IV Pan-European Corridor, for the trains circulation with maximum speed of 160 km/h,
Section : Braşov - Sighişoara

Proiect/Project
2004/RO/16/P/PA/003

Faza / Phase:
P.Th. / T.D.

Denumire desen / Drawing Title :

Pod provizoriu G12/G15/G18 - Proces Tehnologic 1

G12/G15/G18 Provisory bridge - Technological Process 1

Codificare / Codification System	Scara / Scale 1:100	LOT / LOT	Nr. / No 01 / 01
E A 5 1 0 1 E 0 0 B A P O 0 0 0 0 0 1 9 0			