PILES WALL/PILA
ø1200/1.30m
H=15.00m Scale/Scare 1:50

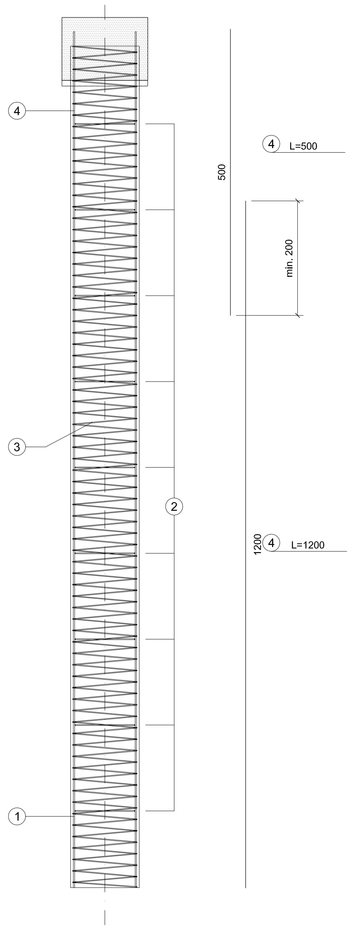

PILES WALL/PILA
ø1200/1.30m
H=17.00m Scale/Scare 1:50

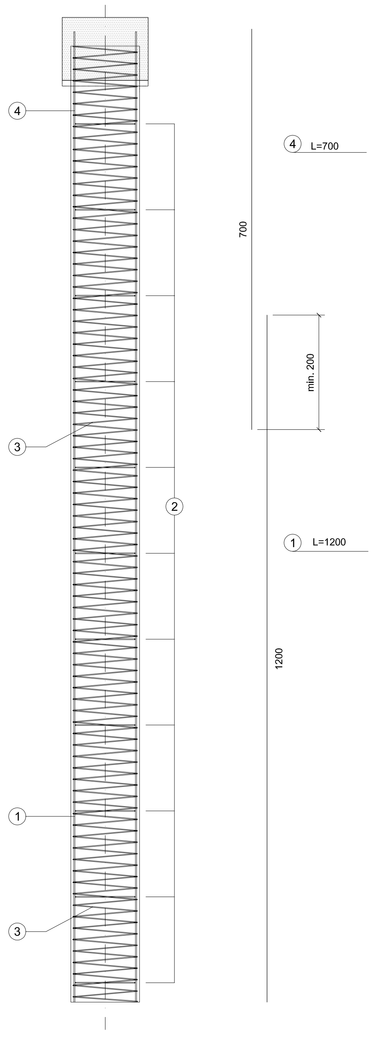

PILES WALL/PILA
ø1200/1.30m
H=22.00m Scale/Scare 1:50

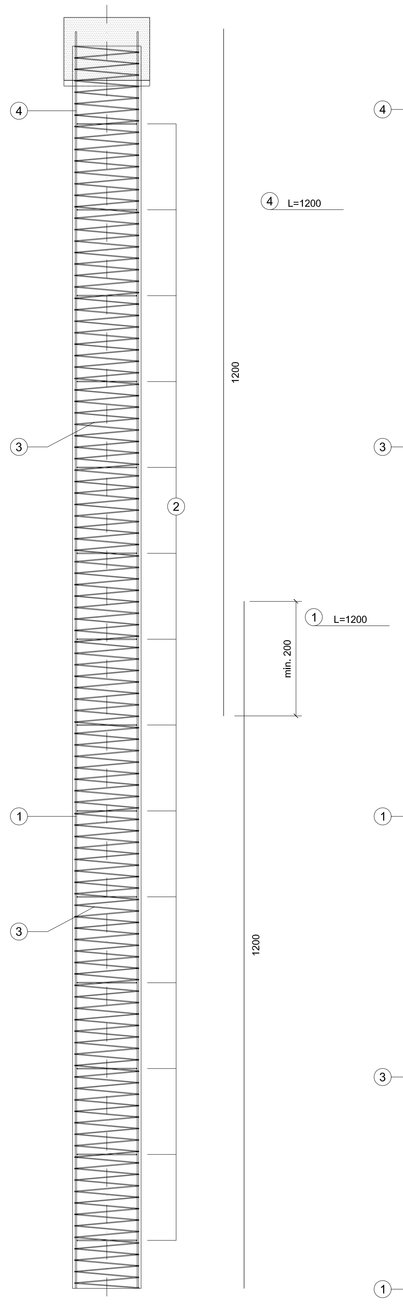

PILES WALL/PILA
ø1200/1.30m
H=25.00m Scale/Scare 1:50

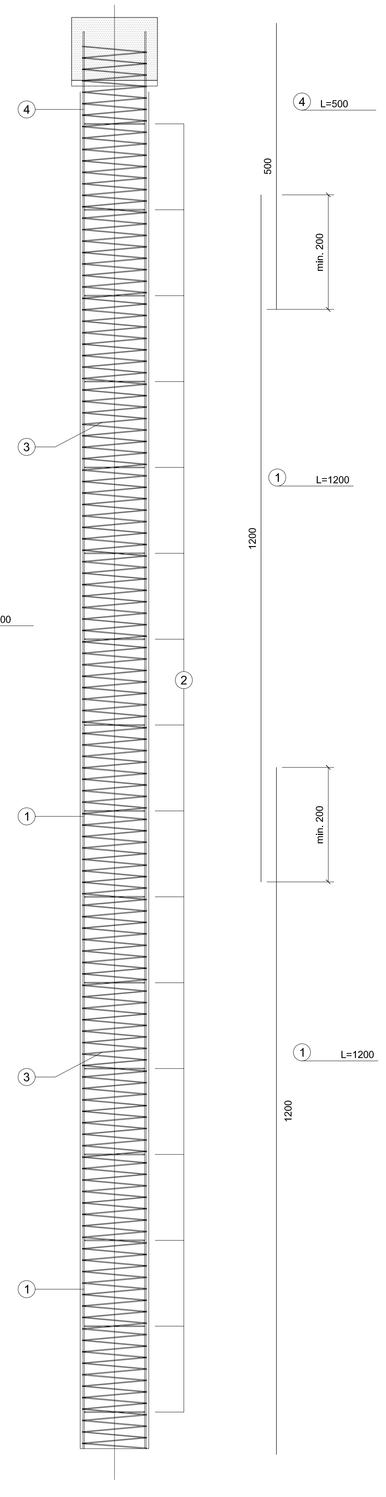

PILES WALL/PILA
ø1200/1.30m
H=28.00m Scale/Scare 1:50

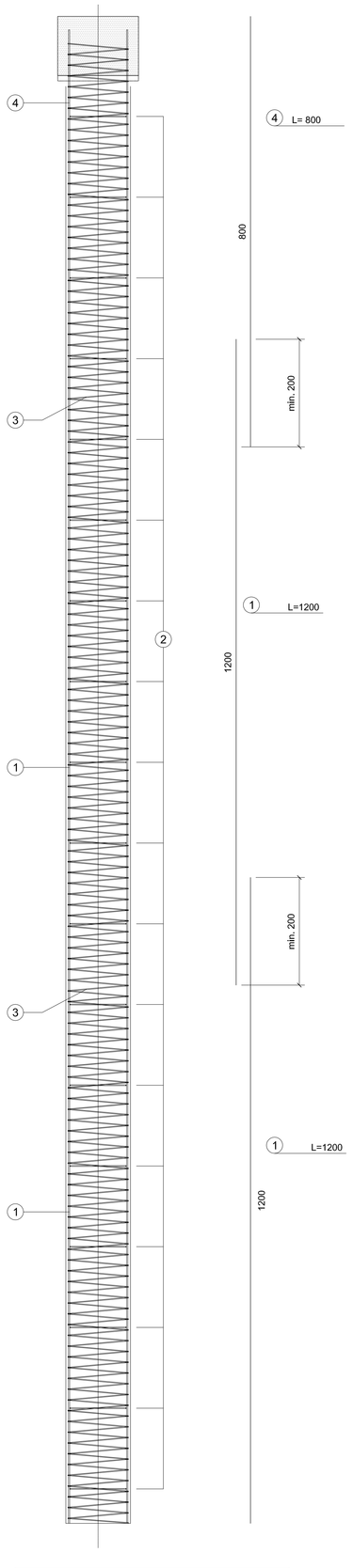

PILES WALL/PILA Ø1200/1.30m H=15.00m

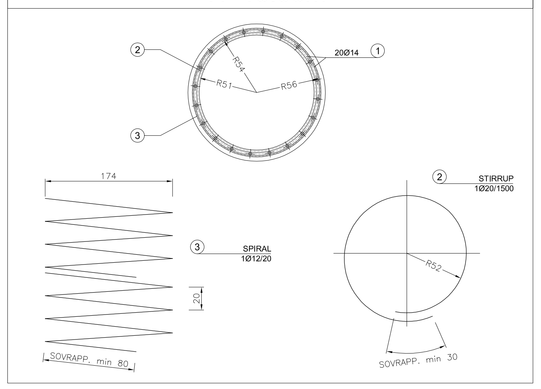

PILES WALL/PILA Ø1200/1.30m H=17.00m

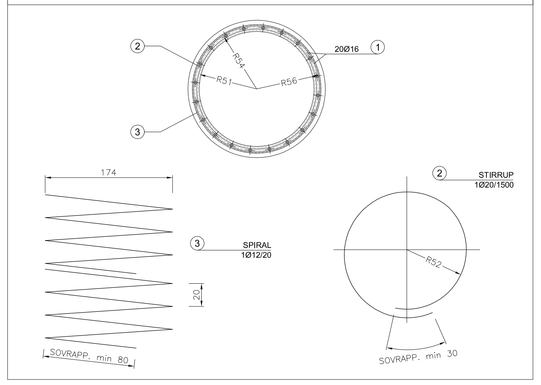

PILES WALL/PILA Ø1200/1.30m H=22.00m

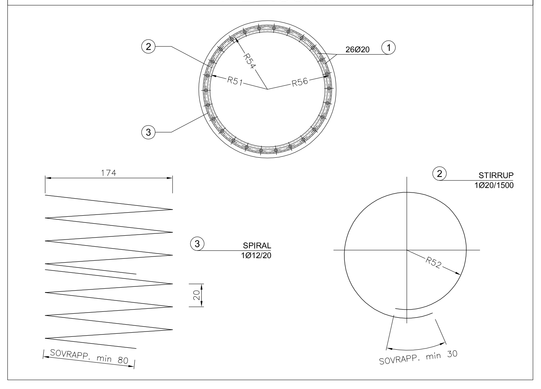

PILES WALL/PILA Ø1200/1.30m H=25.00m

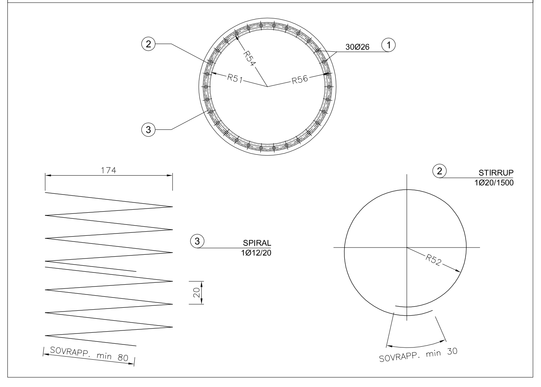

PILES WALL/PILA Ø1200/1.30m H=28.00m

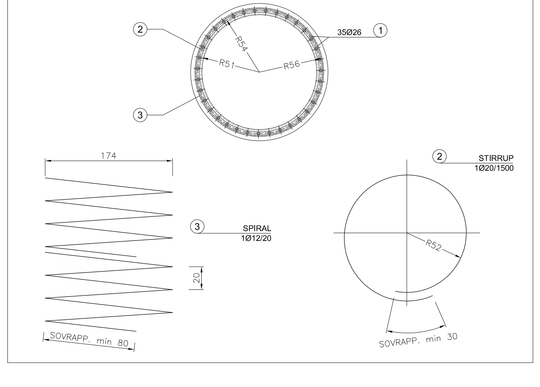

STEELS TABLE

REINFORCING STEEL:

- B450C (weldable)

Bending diameter d_{Br} :

ø Bar < ø20 -> d_{Br} = 6ø

ø Bar ø20–ø26 -> d_{Br} = 8ø

Legend measures:

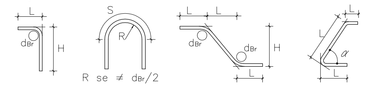

MATERIAL TABLE

CONCRETE PILE:

- Type H2
- fck >=25 MPa
- Water/cement ratio <0.50
- Minimum structural Class S4/S5
- Cement type CEM III/V
- Class of chloride content Cl 0.20
- ø max aggregate = 22.4 mm

CONCRETE CURB:

- Type H2
- fck >=25 MPa
- Water/cement ratio <0.50
- Minimum structural Class S4/S5
- Cement type CEM III/V
- Class of chloride content Cl 0.20
- ø max aggregate = 22.4 mm

REINFORCING STEEL:

- B450C controled by establishment
- Weldable

LEAN CONCRETE:

- Type I
- fck >=12 MPa
- Cement type CEM I/V

PILES WALL/PILA Ø1200/1.30m H=15.00m TIPE/TIP 1

POS.	Ø [mm]	FORM	LENGHT [cm]	
1	14	1200	1200	20
2	20 / 1500	345	345	9
3	12 / 200	174	348	75
4	20	500 / 1200 (200)	500	26

PILES WALL/PILA Ø1200/1.30m H=17.00m TIPE/TIP 2

POS.	Ø [mm]	FORM	LENGHT [cm]	
1	16	1200	1200	20
2	20 / 1500	345	345	11
3	12 / 200	174	348	83
4	20	700 / 1200 (200)	700	26

PILES WALL/PILA Ø1200/1.30m H=22.00m TIPE/TIP 3

POS.	Ø [mm]	FORM	LENGHT [cm]	
1	20	1200	1200	26
2	20 / 1500	345	345	14
3	12 / 200	174	348	109
4	16	1200 / 1200 (200)	1200	20

PILES WALL/PILA Ø1200/1.30m H=25.00m TIPE/TIP 4

POS.	Ø [mm]	FORM	LENGHT [cm]	
1	26	1200	1200	30
2	20 / 1500	345	345	16
3	12 / 200	174	348	122
4	26	510 / 1200 / 1200 (200)	510	35

PILES WALL/PILA Ø1200/1.30m H=28.00m TIPE/TIP 5

POS.	Ø [mm]	FORM	LENGHT [cm]	
1	26	1200	1200	35
2	20 / 1500	345	345	18
3	14 / 200	174	348	137
4	26	800 / 1200 / 1200 (200)	800	35

Indice Index	Data Date	Modificare Modification/Revision	Proiectant Designer	Aprobat Consultant Approved Consultant	Aprobat CFR Approved CFR
D					
C					
B					
A					

GUVERNUL ROMANIEI
ROMANIAN GOVERNMENT

PROIECT FINANŢAT DE UNIUNEA EUROPEANĂ
EUROPEAN UNION FINANCED PROJECT

CLIENT / CLIENT

C.N.C.F. "C.F.R." - S.A.

ITALFERR GRUPPO FERROVIE DELLO STATO
Joint Venture leader

Scott Wilson

OBERMEYER PLANEN + BERATEN GmbH

TECNIC Consulting Engineers

CONSULTANT / CONSULTANT

			Data Date	Semnătură Signature
Aprobat Approved	Şef proiect Project manager	R. Liuzza		
Aprobat Approved	Coordonator Secţiune 1 Section 1 Coordinator	C.Gambelli		
Verificat Checked	Tunel Expert Tunnel Expert	C. Gambelli		
Întocmit Elaborated	Proiectant Designer	C.Gambelli		

SUBCONSULTANT / SUBCONSULTANT

Aprobat Approved	Responsabil Subconsultant Subconsultant Responsible			
Întocmit Elaborated	Proiectant Designer			

Reabilitarea liniei de cale ferata Braşov - Simeria, parte componentă a coridorului IV Pan European, pentru circulaţia trenurilor cu viteza maximă de 160 km/h. Secţiune 1 Braşov - Sighişoara

Rehabilitation of the railway line Braşov - Simeria, component Part of the IV Pan-European Corridor, for the trains circulation with maximum speed of 160 km/h. Section 1 Brasov - Sighisoara

Proiect/Project
2004/RO/16/P/PA/003

Faza / Phase:
P.Th. / T.D.

Denumire desen / Drawing Title : **ORMENIS TUNNEL**
ENTRANCE ORMENIS SIDE
Tunnel entrance concrete pile wall: Reinforcements
Piles din beton a peretului de la intrarea în tunel: Armaturi

Codificare / Codification System	Scara / Scale	LOT	Nr. / No
	variat / various		-

E A 5 1 | 0 1 | C | 1 0 | B Z | G A | 0 1 | 0 | 0 | 0 0 2 | 0