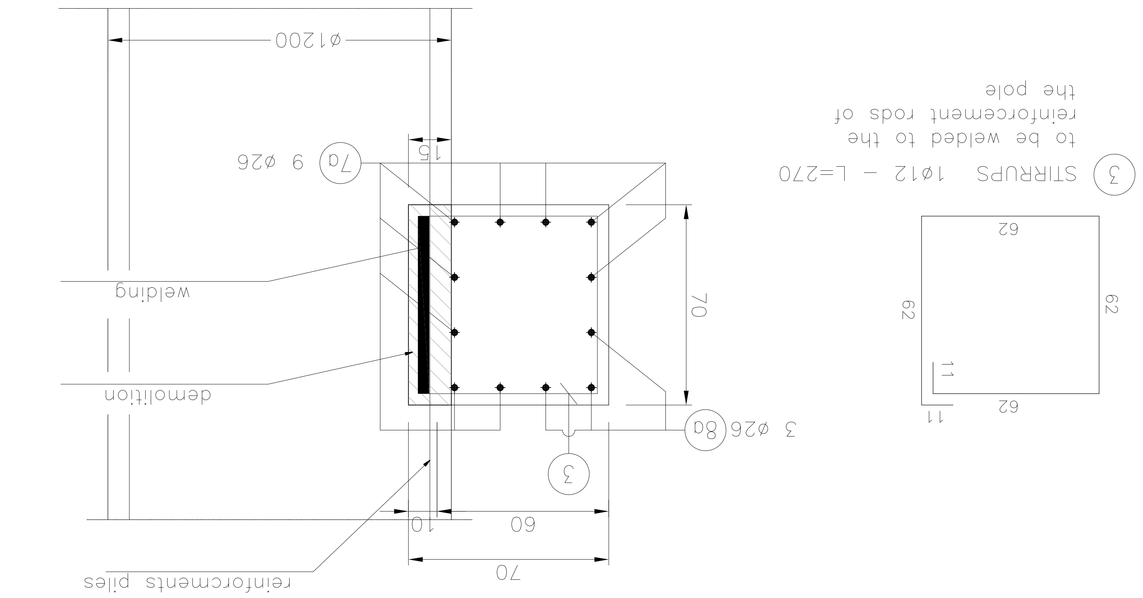

CURB REINFORCED CONCRETE ON PILES
BORDURA DIN BETON ARMAT DEASUPRA PILA
Reinforcements/Armaturi
Scale/Scare 1:10

3 STIRRUPS 1ø12 – L=270
to be welded to the reinforcement rods of the pole

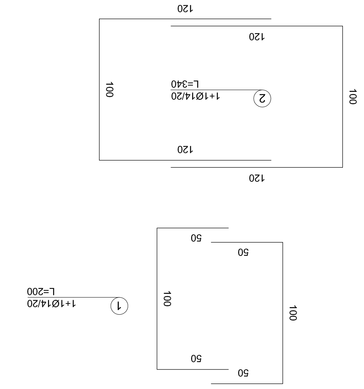

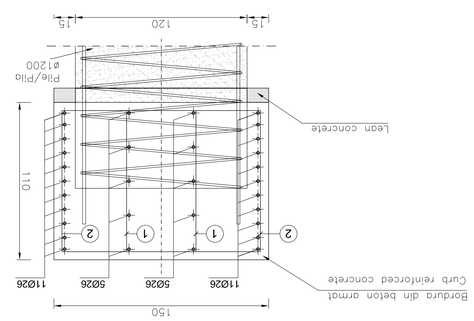

CURB REINFORCED CONCRETE –TYPE 1
BORDURA DIN BETON ARMAT–TIP 1
Reinforcements/Armaturi
Scale/Scare 1:20

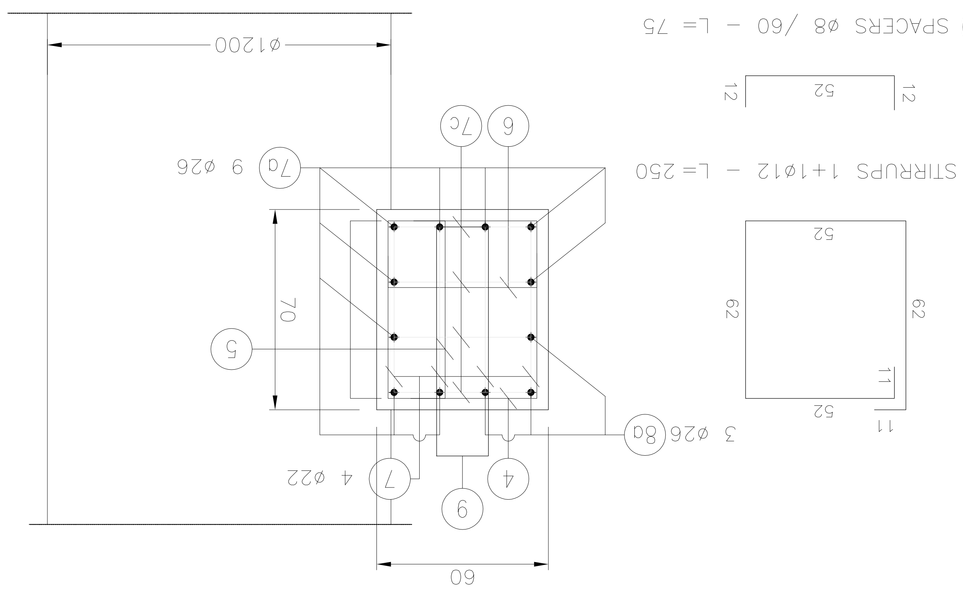

CURB REINFORCED CONCRETE– TYPICAL SECTION
BORDURA DIN BETON ARMAT– SECTIUNI TIP
Reinforcements/Armaturi
Scale/Scare 1:10

4 STIRRUPS 1+1ø12 – L=250

6 SPACERS ø8 /60 – L= 75

5 SPACERS ø8 /60 – L=85

9 STIRRUPS 1ø12 /20 – L=220

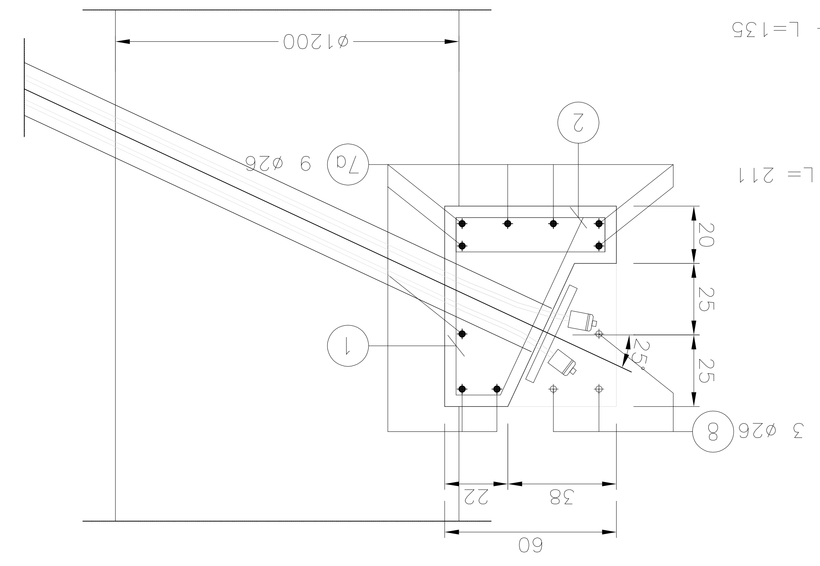

2 STIRRUPS 1ø12/20 – L=135

1 STIRRUPS 1ø12/20 – L= 211

CURB REINFORCED CONCRETE WITH TENDONS–TYPE 2
BORDURA DIN BETON ARMAT CU FRANGHIE–TIP 2
Reinforcements/Armaturi
Scale/Scare 1:10

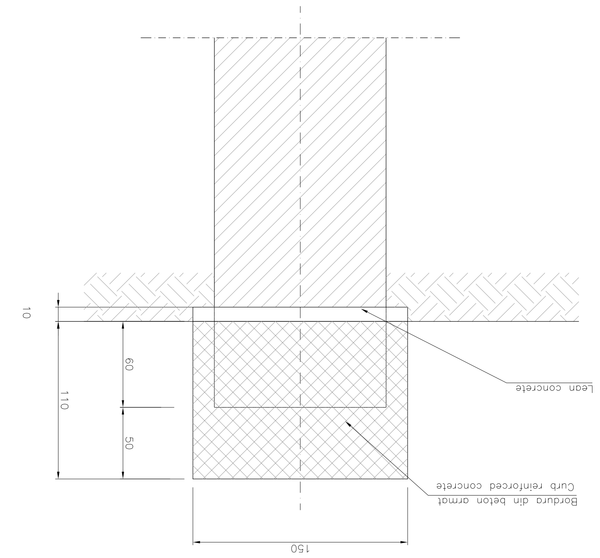

CURB REINFORCED CONCRETE
BORDURA DIN BETON ARMAT
Formworks/Cofraje
Scale/Scare 1:20

STEELS TABLE

REINFORCING STEEL

– B450C (weldable)

Bending diameter d_{Br} :

ø Br < ø20 -> d_{Br} = 6ø

ø Br ø20–ø26 -> d_{Br} = 8ø

R se ≥ d_B/2

Legend measures:

MATERIAL TABLE

CONCRETE PILE

– Type H2
– fck >=25 MPa
– Water/cement ratio <0,50
– Minimun structural Class S4/S5
– Class of chloride content Cl 0,20
– ø max aggregate = 22,4 mm

CONCRETE C.URR.

– Type H2
– fck >=25 MPa
– Water/cement ratio <0,50
– Minimun structural Class S4/S5
– Cement type CEM III/V
– Class of chloride content Cl 0,20
– ø max aggregate = 22,4 mm

REINFORCING STEEL

– B450C controled by establishment
– Weldable

LEAN CONCRETE

– Type I
– fck >=12 MPa
– Cement type CEM I/V

D						
C						
B						
A						
Indice Index	Data Date	Modificarea Modification	Proiectat Designer	Aprobat Consultant Approved Consultant	Aprobat CFR Approved CFR

GUVERNUL ROMANIEI
ROMANIAN GOVERNMENT

PROIECT FINANTAT DE UNIUNEA EUROPEANĂ
EUROPEAN UNION FINANCED PROJECT

CFR
C.N.C.F. "C.F.R." - S.A.
CLIENT / CLIENT

RUBER Construcții SRL Timișoara
Lucrări Verificare Autorizate
Scott Wilson
OBERMEYER FAHEN + BERATEN GMBH
TECNIC Consulting Engineers

CONSULTANT / CONSULTANT

Aprobat Approved	Şef proiect Project manager	R. Lăzăra	
Aprobat Approved	Coordonator Secțiune 1 Section 1 Coordinator	C.Gambăă	
Aprobat Checked	Tunel Expert Tunel Expert	C. Gambăă	
Întocmit Elaborated	Proiectat Designer	C.Gambăă	

Data Date
Semnătura Signature

SUBCONSULTANT / SUBCONSULTANT

Aprobat Approved	Responsabil Subconsultant Subconsultant Responsible		
Întocmit Elaborated	Proiectat Designer		

Realizarea liniei de cale ferată Braşov - Simeria, parte componentă a coridorului IV Pan European, pentru circulația trenurilor cu viteza maximă de 160 km/h.
Secțiunea 1 Braşov - Sighişoara

Realization of the railway line Braşov - Simeria, component part of the IV Pan-European Corridor, for the trains circulation with maximum speed of 160 km/h.
Section 1 Braşov - Sighişoara

Proiect/Project
2004/RO/16/P/PA/003
Faza / Phase: P.Th. / T.D.

Denumire desen / Drawing Title : **ORMENIS TUNNEL**
ENTRANCE KAOOS SIDE
Tunel intrarea cu partea pile wall- curb reinforced concrete - framework and reinforcement
Pilon din beton și parțial de la intrarea în tunel bordura din beton armat - cofraj și armatură

Scara / Scale: **variat / various**
LOT
Nr. / No. -

Codificare / Codification System

E A 5 1 0 1 C 1 0 B Z G A 0 2 0 0 0 0 3 0