ROOF PLAN/PLAN DE ACOPERIS
Scale/Scare 1:100

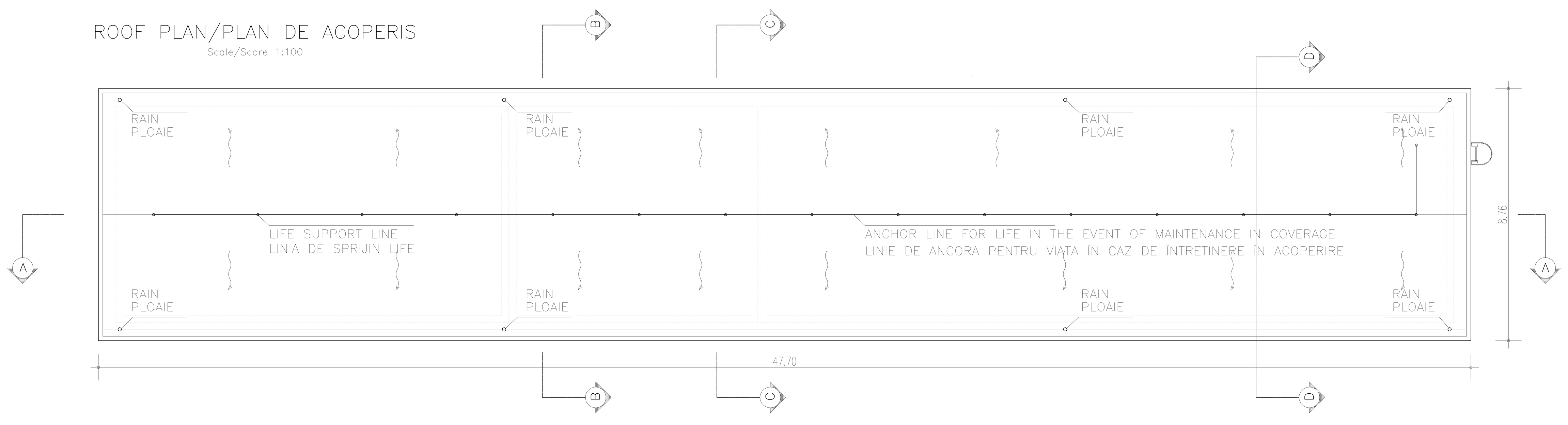

PLAN
Scale/Scare 1:100

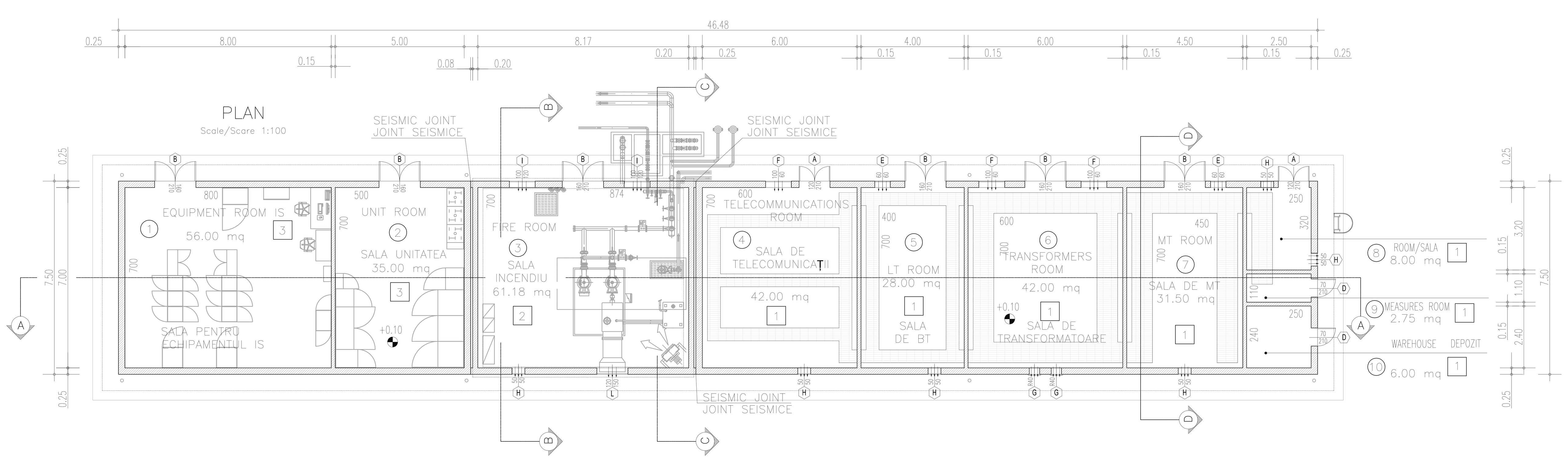

TANK FIRE PLAN/ PLAN DE FOC REZERVOR
Scale/Scare 1:100

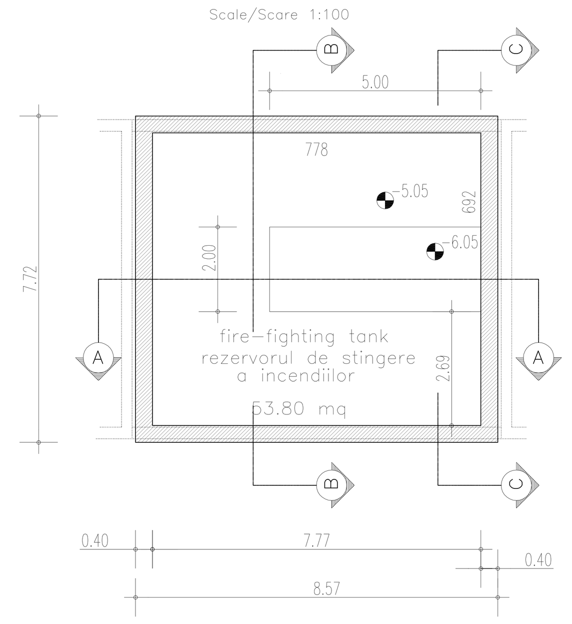

TANK BAIL PLAN/ REZERVORUL CAUTIUNE PLAN
Scale/Scare 1:100

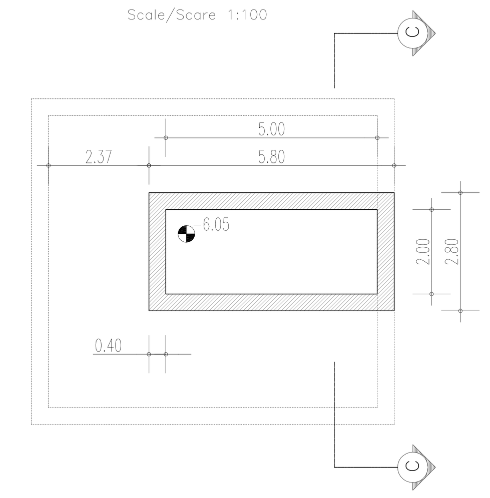

ROOF DETAIL/DETALIU DE ACOPERSIS
Scale/Scare 1:10

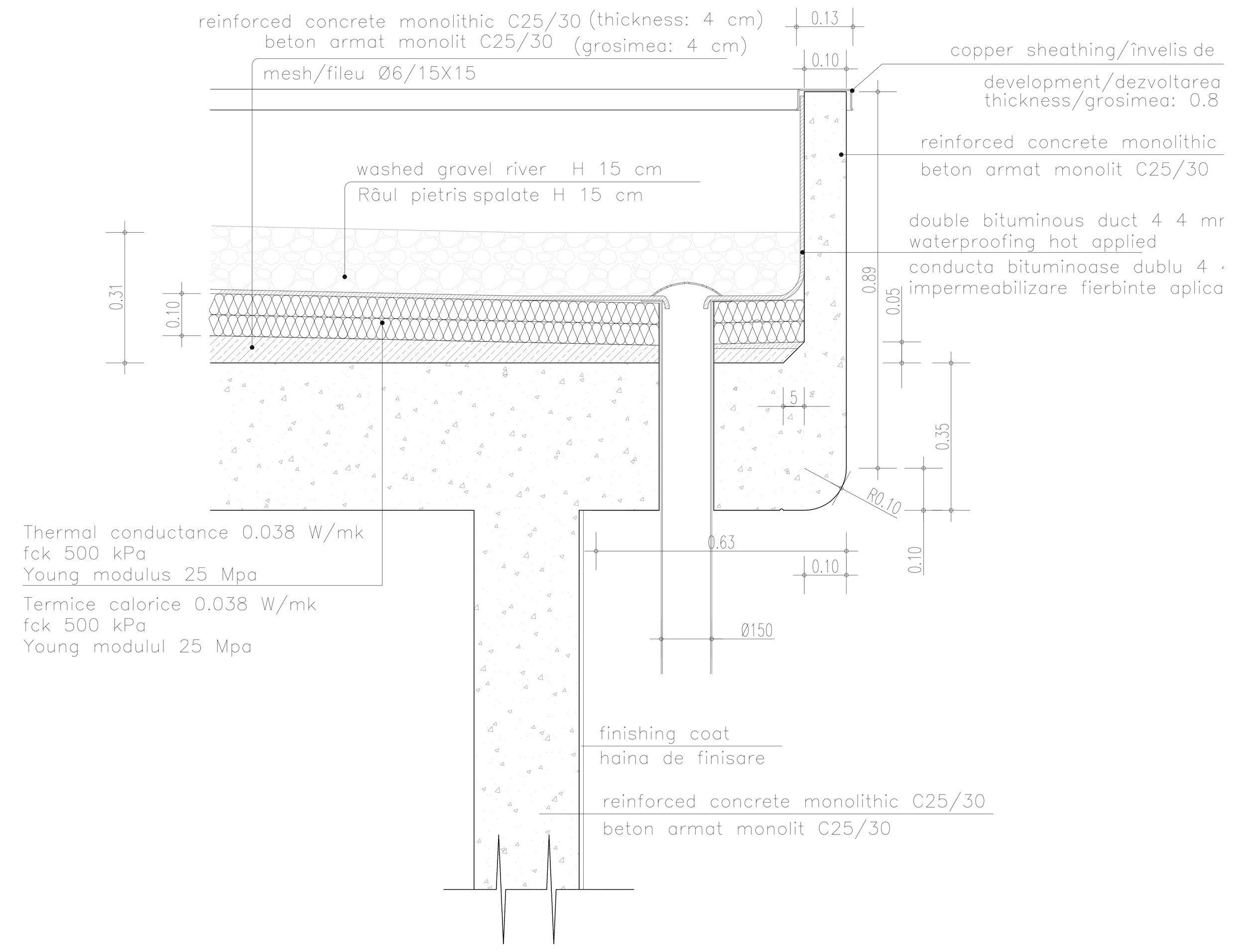

NORTH ELEVATION/NORD ELEVATIE
Scale/Scare 1:100

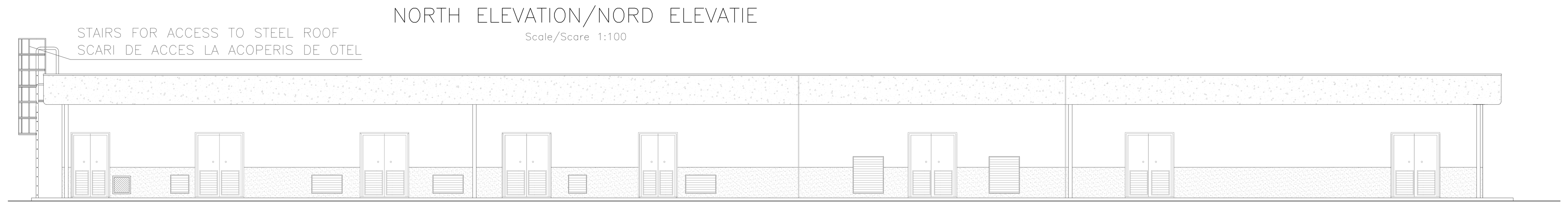

SOUTH ELEVATION/SUD ELEVATIE
Scale/Scare 1:100

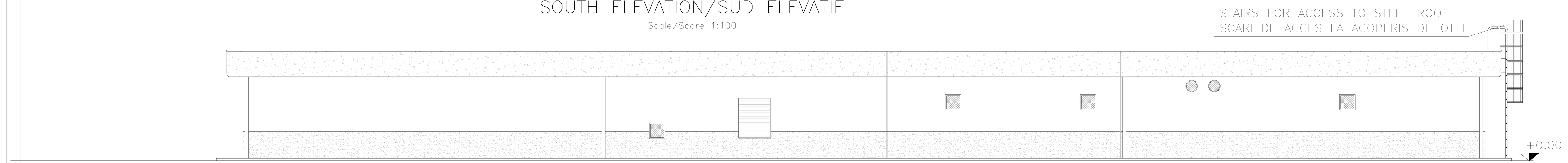

SECTION A-A/SECTIUNI A-A
Scale/Scare 1:100

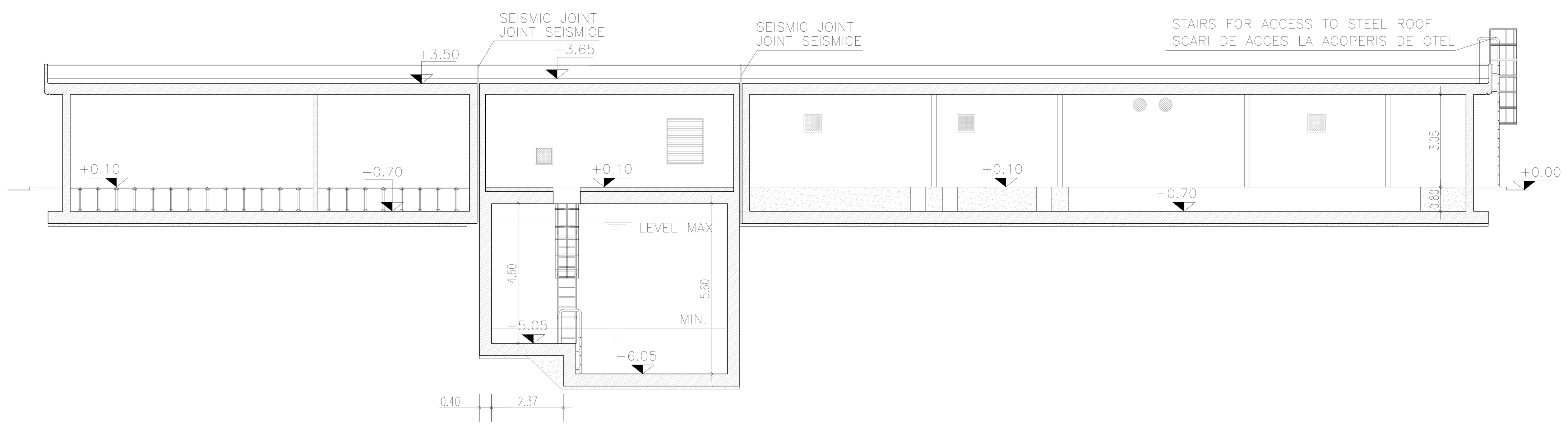

WEST ELEVATION/EST ELEVATIE
Scale/Scare 1:100

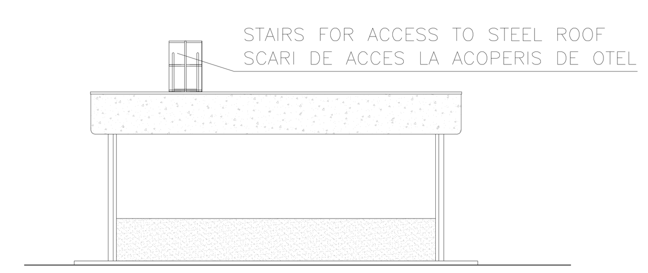

EST ELEVATION/EST ELEVATIE
Scale/Scare 1:100

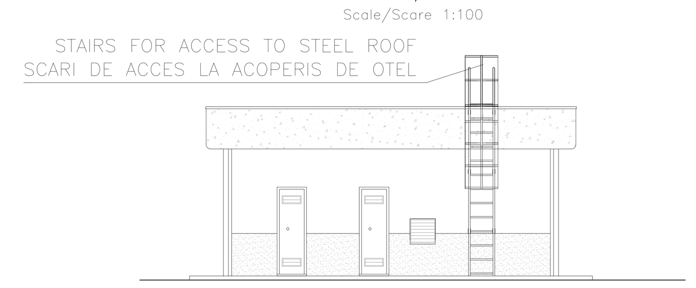

SECTION D-D/SECTIUNI D-D
Scale/Scare 1:100

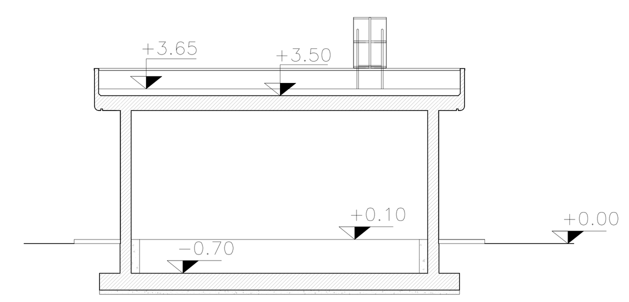

SECTION C-C/SECTIUNI C-C
Scale/Scare 1:100

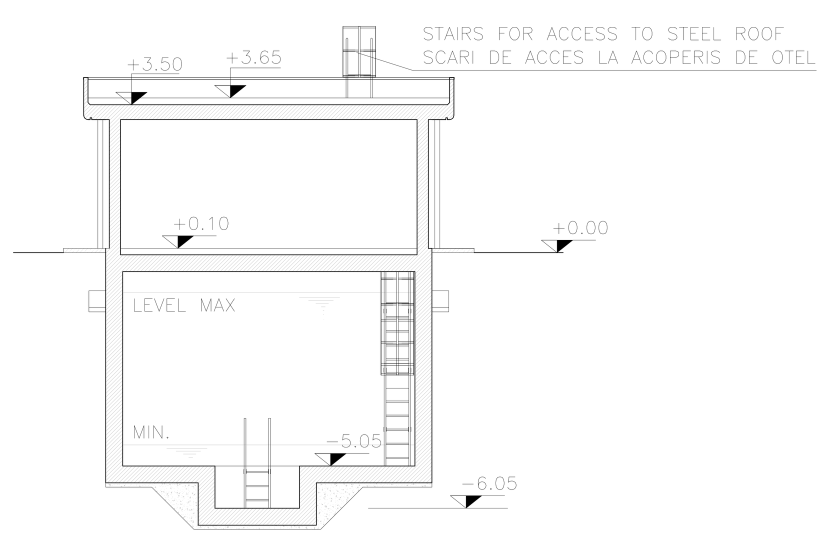

SECTION B-B/SECTIUNI B-B
Scale/Scare 1:100

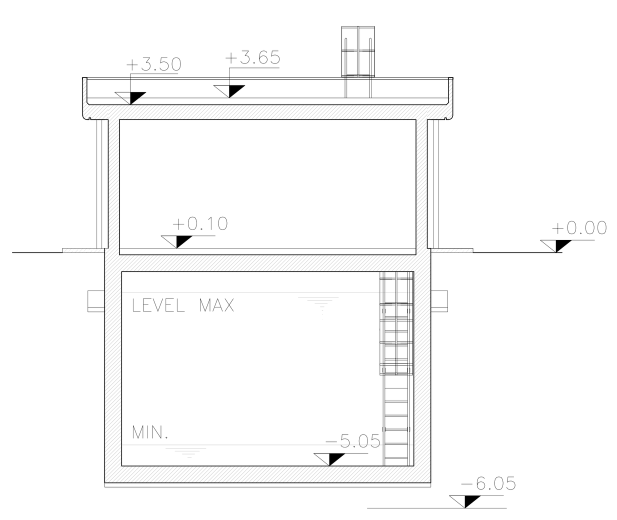

MATERIAL TABLE

SLAB CONCRETE:

- Type G2
- fck >=30 MPa
- Water/cement ratio <0.50
- Minimun structural Class S3/S4
- Exposure class related to environmental conditions: XA2
- Cement type CEM III/V
- Class of chloride content Cl 0.20
- ø max aggregate = 32 mm

REINFORCING STEEL:

- B450C controled by establishment
- Weldable

LEAN CONCRETE:

- Type I
- fck >=12 MPa
- Cement type CEM I/V

Indice Index	Data Date	Modificare Modification/Revision	Proiectant Designer	Aprobat Consultant Approved Consultant	Aprobat CFR Approved CFR
D					
C					
B					
A					

GUVERNUL ROMANIEI
ROMANIAN GOVERNMENT

PROIECT FINANȚAT DE UNIUNEA EUROPEANĂ
EUROPEAN UNION FINANCED PROJECT

C.N.C.F. "C.F.R." - S.A.

CLIENT / CLIENT

ITALFERR — Joint Venture leader; Scott Wilson; OBERMEYER PLANEN + BERATEN GmbH; TECNIC Consulting Engineers

CONSULTANT / CONSULTANT

			Data Date	Semnătură Signature
Aprobat Approved	Şef proiect Project manager	R. Liuzza		
Aprobat Approved	Coordonator Secţiune 1 Section 1 Coordinator	C.Gambelli		
Verificat Checked	Tunel Expert Tunnel Expert	C. Gambelli		
Întocmit Elaborated	Proiectant Designer	C.Gambelli		

SUBCONSULTANT / SUBCONSULTANT

Aprobat Approved	Responsabil Subconsultant Subconsultant Responsible	
Întocmit Elaborated	Proiectant Designer	

Reabilitarea liniei de cale ferata Braşov - Simeria, parte componentă a coridorului IV Pan European, pentru circulaţia trenurilor cu viteza maximă de 160 km/h. Secţiune 1 Brasov - Sighisoara

Rehabilitation of the railway line Braşov - Simeria, component Part of the IV Pan-European Corridor, for the trains circulation with maximum speed of 160 km/h. Section 1 Brasov - Sighisoara

Proiect/Project 2004/RO/16/P/PA/003

Faza / Phase: P.Th. / T.D.

Denumire desen / Drawing Title : **ORMENIS TUNNEL**
ENTRANCE RACOS SIDE
Building technology: formwork- plans, sections and details
Clădirea tehnologie : plans,sectiuni si detaliu

Codificare / Codification System — Scara / Scale: variat / various — LOT — Nr. / No

E	A	5	1	0	1	C	1	0	T	S	G	A	0	2	0	0	0	0	1	0