MEDICAL CARE BUILDING GROUND FLOOR PLAN/CLADIRE DE SANATATE PLAN DE PARTER – SCALE 1:50

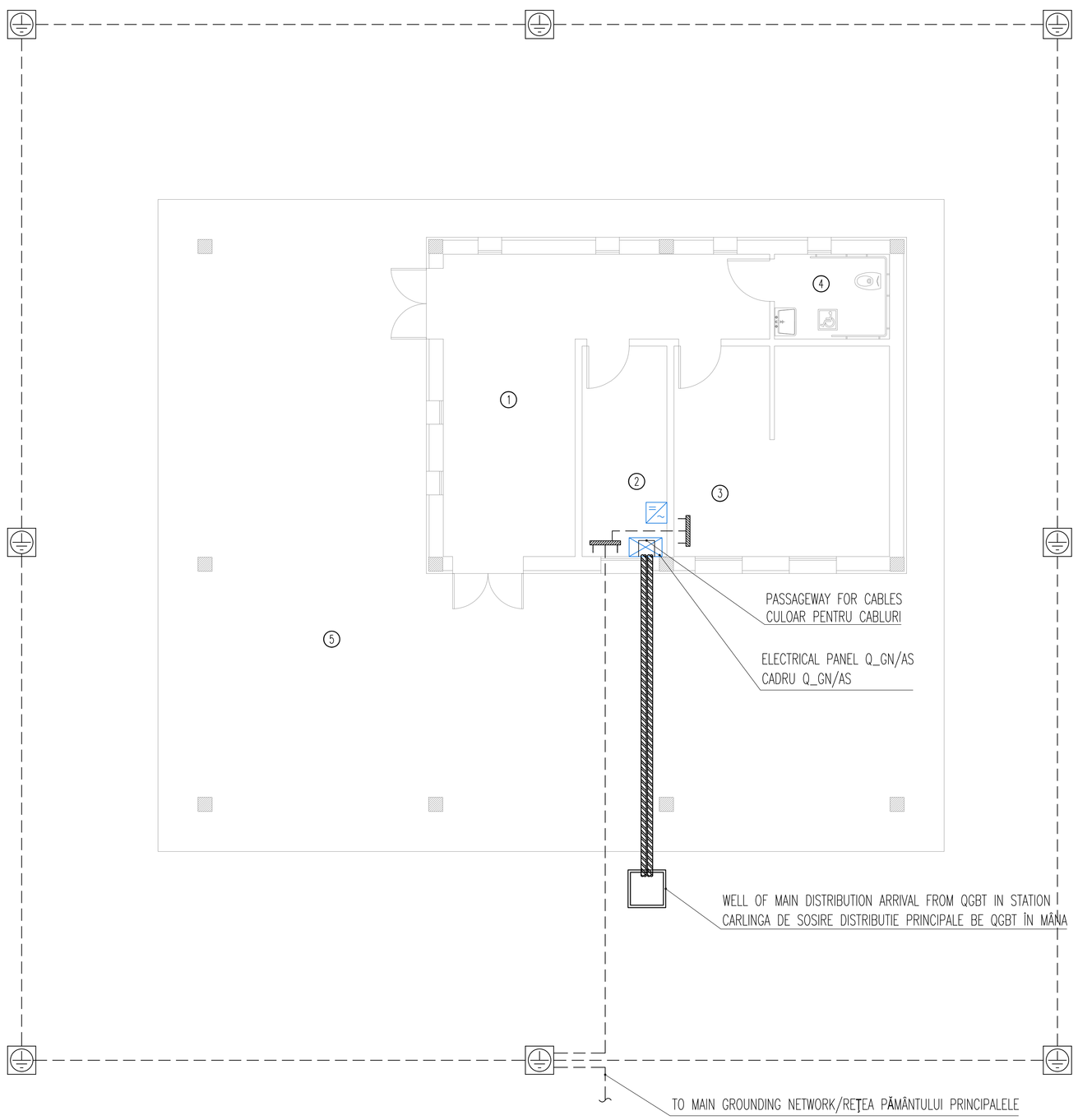

LOCAL 2

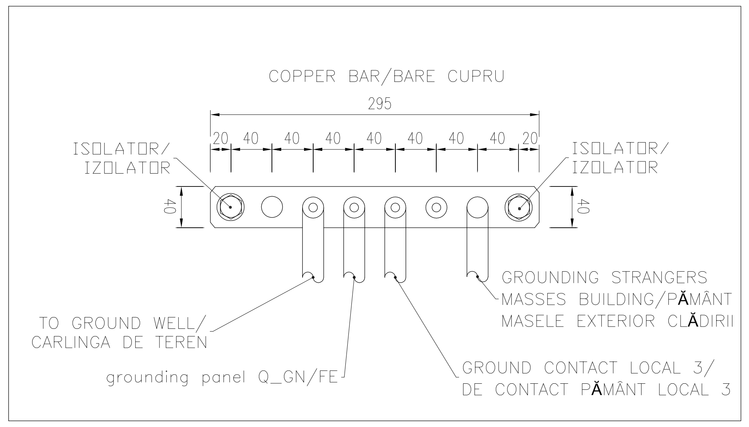

LOCALE 3

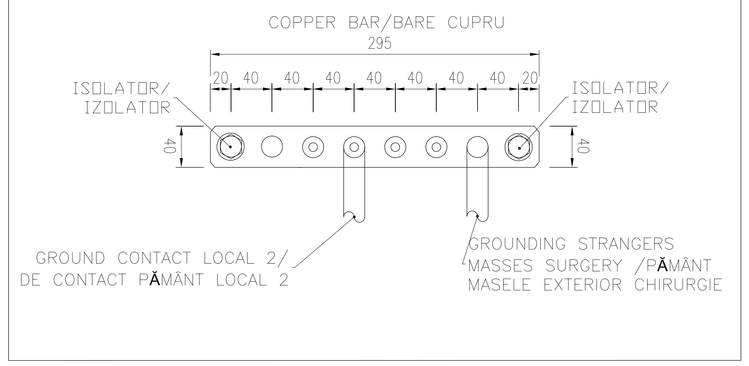

MEDICAL CARE BUILDING LOCAL LEGEND/ LEGENDA LOCALE CLADIRE DE SANATATE	
LOCAL	DESCRIPTION/DESCRIERE
1	WAITING LOCAL LOCALE ÎN AŞTEPTARE
2	LOCAL
3	SURGERY CHIRURGIE
4	W.C.
5	ARCADE/PORTIC

GROUNDING WELL DETAILED/DETALIU BINE LA PAMANT

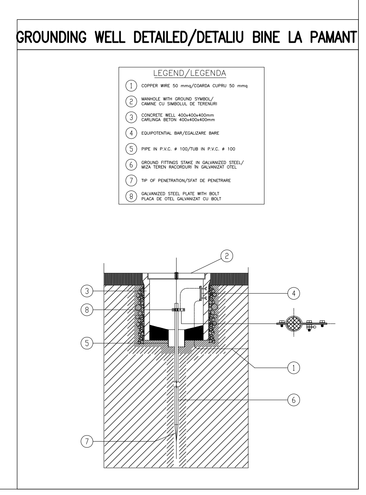

SYMBOLS LEGEND/LEGENDA SIMBOLOURI

SYMBOL/SIMBOLUL	DESCRIPTION/DESCRIERE
	ELECTRICAL PANEL/CADRU ELECRTICE
	WELL OF MAIN DISTRIBUTION ARRIVAL FROM QGBT IN STATION CARLINGA DE SOSIRE DISTRIBUTIE PRINCIPALE BEQGBT ÎN MÂNA
	POLYETHYLENE CORRUGATED EXTERNALLY PIPE D 110 mm TEAVA DIN POLIETILENA ONDULAT EXTERN D 110 mm
	GROUND INSPECTIONABLE WELL 400x400x400 mm WITH SINK BINE LA PAMANT INSPECT 400x400x400 mm CU CHIUVETA
– – –	COPPER WIRE 50 mmq/COARDA CUPRU 50 mmq
– – –	COPPER BAND 40x30 mm/banda cupru 40x30 mm
	COPPER EQUIPOTENTIAL BAR/EGALIZARE CUPRU BARE
	THREE PHASE INVERTER FOR NETWORK CONNECTION, CONNECTION DC–AC/INVERTOR TREI FAZA PENTRU RETEA,CONECTARE DC–AC NOMINAL POWER 20kW/NOMINALE DE ALIMENTARE 20kW

KEY MAP/HARTA CHEIE

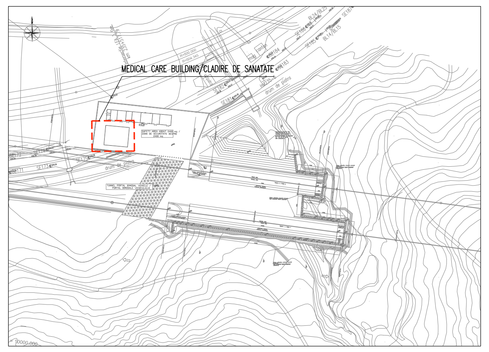

D					
C					
B					
A					
Indice Index	Data Date	Modificare Modification/Revision	Proiectant Designer	Aprobat Consultant Approved Consultant	Aprobat CFR Approved CFR

GUVERNUL ROMANIEI
ROMANIAN GOVERNMENT

PROIECT FINANŢAT DE UNIUNEA EUROPEANĂ
EUROPEAN UNION FINANCED PROJECT

CFR

C.N.C.F. "C.F.R." - S.A.

CLIENT / CLIENT

ITALFERR GRUPPO FERROVIE DELLO STATO
Joint Venture leader

Scott Wilson

OBERMEYER PLANEN + BERATEN GmbH

TECNIC Consulting Engineers

CONSULTANT / CONSULTANT

			Data Date	Semnătură Signature
Aprobat Approved	Şef proiect Project manager	R. Liuzza		
Aprobat Approved	Coordonator Secţiune 1 Section 1 Coordinator	C. Gambelli		
Verificat Checked	Tunel Expert Tunnel Expert	C. Gambelli		
Întocmit Elaborated	Proiectant Designer	P. Amodio		

SUBCONSULTANT / SUBCONSULTANT

Aprobat Approved	Responsabil Subconsultant Subconsultant Responsible			
Întocmit Elaborated	Proiectant Designer			

Reabilitarea liniei de cale ferata Braşov - Simeria, parte componentă a coridorului IV Pan European, pentru circulaţia trenurilor cu viteza maximă de 160 km/h. Secţiune 1 Brasov - Sighisoara

Rehabilitation of the railway line Braşov - Simeria, component Part of the IV Pan-European Corridor, for the trains circulation with maximum speed of 160 km/h. Section 1 Brasov - Sighisoara

Proiect/Project
2004/RO/16/P/PA/003

Faza / Phase:
P.Th. / T.D.

Denumire desen / Drawing Title : **TUNNEL/TUNELUL HOMOROD**
RACOS SIDE/INSPRE RACOS
Maedical care building/Clădire de sănătate
Layout plan main electrical distribution systems/Plan de situatie principalele sisteme de distribuţie electrică

Codificare / Codification System	Scara / Scale	LOT	Nr. / No
E A 5 1 0 1 C 1 2 L X T S 2 0 7 8 0 0 1 0	-		-