D					
C					
B					
A					
Indice Index	Data Date	Modificare Modification/Revision	Proiectant Designer	Aprobat Consultant Approved Consultant	Aprobat CFR Approved CFR

GUVERNUL ROMANIEI
ROMANIAN GOVERNMENT

PROIECT FINANȚAT DE UNIUNEA EUROPEANĂ
EUROPEAN UNION FINANCED PROJECT

CLIENT / CLIENT

C.N.C.F. "C.F.R." - S.A.

ITALFERR
GRUPPO FERROVIE DELLO STATO
Joint Venture leader

Scott Wilson

OBERMEYER
PLANEN + BERATEN GmbH

TECNIC
Consulting Engineers

CONSULTANT / CONSULTANT

			Data Date	Semnătură Signature
Aprobat Approved	Şef proiect Project manager	R. Liuzza		
Aprobat Approved	Coordonator Secțiune 1 Section 1 Coordinator	C. Gambelli		
Verificat Checked	Tunel Expert Tunnel Expert	C. Gambelli		
Întocmit Elaborated	Proiectant Designer	P. Amodio		

SUBCONSULTANT / SUBCONSULTANT

Aprobat Approved	Responsabil Subconsultant Subconsultant Responsible			
Întocmit Elaborated	Proiectant Designer			

Reabilitarea liniei de cale ferata Braşov - Simeria, parte componentă a coridorului IV Pan European, pentru circulația trenurilor cu viteza maximă de 160 km/h.
Sectiune 1 Brasov - Sighisoara

Rehabilitation of the railway line Braşov - Simeria, component Part of the IV Pan-European Corridor, for the trains circulation with maximum speed of 160 km/h.
Section 1 Brasov - Sighisoara

Proiect/Project
2004/RO/16/P/PA/003

Faza / Phase:
P.Th. / T.D.

Denumire desen / Drawing Title : **TUNNEL/TUNELUL ORMENIS**
ORMENIS SIDE/INSPRE ORMENIS

Safety Tunnel Power Supply system /Sistem de alimentare de siguranță a tunelul
Single-line diagrams low-voltage electrical panels Q_MT/BT/Diagrame single-line cadru electrice joasa tensiune Q_BT/PE

Codificare / Codification System	Scara / Scale	LOT	Nr. / No
	-		

E	A	5	1	0	1	C	1	0	L	X	T	S	1	0	2	6	0	0	3	0

ELECTRICAL CHARACTERISTICS/ CARACTERISTICILE ELECTRICE

RATED INSULATION VOLTAGE/TENSIUNEA NOMINALA DE IZOLARE	1000 V
RATED WORKING VOLTAGE/TENSIUNE DE LUCRU NOMINALA	400/230 V
NOMINAL FREQUENCY/FRECVENTA NOMINALA	50 Hz
ELECTRICAL SYSTEM/SISTEMUL ELECTRIC	TN-S
MAXIMUM SHORT CIRCUIT CURRENT ALLEGED/MaximA Curent de scurt circuitului PRESUPUSA MAXIMUM SHORT CIRCUIT CURRENT ALLEGED/MaximA Curent de scurt circuitului PRESUPUSA	15 kA
RATED CURRENT (BAR MAIN)/CURENT NOMINAL (BARUL PRINCIPAL)	400 A
ACCEPTABLE RATED CURRENT/CURENT NOMINAL ACCEPTABIL SHORT FOR 1 SEC./SCURT PENTRU 1 SEC.	105 kA
RATED CURRENT/CURENT NOMINAL ALLOWABLE PEAK/ADMISIBILE PEAK	254 kA
NOMINAL VOLTAGE AUXILIARY CIRCUITS/ TENSIUNEA NOMINAL CIRCUITELOR AUXILIARE	230 Vac / 24 Vdc
TEST VOLTAGE/TENSIUNE DE TESTARE A 50 HZ FOR 1 MIN./A 50 HZ PENTRU 1 MIN. — CIRCUITS OF POWER/ CIRCUITE DE PUTERE	2500 V
TEST VOLTAGE/TENSIUNE DE TESTARE A 50 HZ FOR 1 MIN./A 50 HZ PENTRU 1 MIN. — AUXILIARY CIRCUITS/ CIRCUITELOR AUXILIARE	1500 V
IMPULSE WITHSTAND VOLTAGE/TENSIUNE DE REZISTA LA IMPULS	8 kV

TESTING/TESTAREA SEC. CEI 17-113

- [X] INDIVIDUAL TESTS/TESTE INDIVIDUALE
- [ ] TYPE TESTS/TESTE DE TIP

MECHANICAL CHARACTERISTICS/ CARACTERISTICILE MECANICE

FORM OF SEGREGATION/FORMA DE SEGREGARE	3A
CARPENTRY/TAMPLARIE — MATERIAL/MATERIALE	ACCIAIO ZINCATO E VERNICIATO
CARPENTRY/TAMPLARIE — EXTERIOR PANEL THICKNESS/ GROSIMEA PANOULUI EXTERIOR	15/10 mm
DEGREE OF PROTECTION/ GRAD DE PROTECTIE — IP41 — ON THE EXTERNAL INVOLUCRE/ PE EXTERIOR LOCUINTE	
DEGREE OF PROTECTION/ GRAD DE PROTECTIE — IP20 — WITHIN THE PANEL AT OPEN DOORS/ ÎN CADRULA UN DESCHISE USI	
PANEL ACCESSIBILITY/ACCES CADRU — FRONT/FATA	SI
PANEL ACCESSIBILITY/ACCES CADRU — BACK/INAPOI	NO
PANEL ACCESSIBILITY/ACCES CADRU — SIDE/LATERALE	SI
EXPANDABLE PANEL/EXTENSIBIL CADRU — RIGHT SIDE/PARTEA DREAPTA	SI
EXPANDABLE PANEL/EXTENSIBIL CADRU — LEFT SIDE/PARTEA STÂNGA	SI
FUND/PARTEA INFERIOARA	FONDO CHIUSO/BOTOLA ASPORTABILE
FRAME OR BASIC IRON/ FRAME SAU FIER DE BASE	ACCIAIO ZINCATO

POWER/PUTERE	ARRIVALS/SOSIRI	HIGH/TOPURI [X]	LOW/JOASA [X]	CAVO
POWER/PUTERE	DEPARTURES/PLECARI	HIGH/TOPURI [X]	LOW/JOASA [X]	CAVO
AUXILIARIES/ AUXILIARE	ENTRY/INTRARE	HIGH/TOPURI [X]	LOW/JOASA [X]	CAVO
AUXILIARIES/ AUXILIARE	OUTPUT/IESIRE	HIGH/TOPURI [X]	LOW/JOASA [X]	CAVO

PAINTING/PICTURA [X]
(CYCLE NORMALIZED TGN-001)/
(CICLUL NORMALIZAT TGN-001)
SPESS. MIN. 50 MICRON ±10%

EXTERNAL PANEL/ EXTERNE CADRU	RAL 7035
INTERNAL PANEL/ INTERN CADRU	

OVERALL DIMENSIONS (mm)/ DIMENSIUNI DE GABARIT (mm): 3950 LX 2231 HX 637 P

SUBDIVISION SECTIONS/COMPARTIMENTARE SECTIUNI

TOTAL MASS/TOTALE MASA — KG.

CONDITIONS OF SERVICE CONDITII DE SERVICE

TEMPERATURE MAX./TEMPERATURA MAX.	+40°C
MEDIA AMBIENT TEMPERATURE/TEMPERATURII ÎN CAMERA MEDIA	
MINIMUM AMBIENT TEMPERATURE/TEMPERATURA IN CAMERA MINIMA	-5°C
RELATED HUMIDITY MAX/UMIDITATE RELATIVA MAX	83% (23°C)
ALTITUDE ABOVE SEA LEVEL/ALTITUDINEA	<1000 mt
PRESSURE-DEPRESSION/PRESIUNE-DEPRESIA	

COMPLIANCE WITH REGULATIONS/RESPECTAREA REGLEMENTARILOR

CEI ITALIANE	17-113 / EN61439
IEC INTERNAZIONALI	61439-1
OTHERS/ALTE	

NOTE

SPECIFIC DESCRIPTION/DESCRIERE SPECIFICA:

SBARRE PRINCIPALI E DERIVATE
- IN PIATTO DI RAME E/O ALLUMINIO
- ISOLAMENTO IN ARIA

SBARRA DI TERRA
- SEZIONE MINIMA 150 mmq

CAVETTERIA PER CIRCUITI AUSILIARI:
- TIPO N07G9-K
- CAVETTERIA DI COLORE NERO

SEZIONI:
- CIRCUITI AMPEROMETRICI/VOLTMETRICI >= 2.5 mmq
- CIRCUITI DI COMANDO >= 1.5 mmq
- CIRCUITI DI SEGNALAZIONE >= 1.5 mmq

NOTES NUMBER (SEE SUBSEQUENT SHEETS)
(1) SIGNAL OR COMMAND FROM–TO SUPERVISION SYSTEM
(2) INTERLOCK WITH RELATIVE SWITCH MV
(3) BUTTON BLOCK WITH LOCK
(4) BUTTON SWITCH OPENING AND CLOSING:
· THE IGEN1 IGEN2 SWITCHES WILL BE ELECTRICAL INTERLOCKED SO ALLOW ONLY THE TEMPORARY PARALLEL BETWEEN TR1 AND TR2
· THE MOTORIZED SWITCHES MAY BE CONTROLLED BY THE SUPERVISION SYSTEM
(5) RS485 SERIAL COMMUNICATION SYSTEM TO SUPERVISION
(6) THE LINKS BETWEEN THE SPD AND COLLECTOR TO LAND OF THE PANELS SHOULD HAVE A LENGTH LESS OR EQUAL TO 0.5 M
(7) OPERATED BY LOCAL TEMPERATURE PROBE

KEY TO ABBREVIATIONS:
– Ib: OPERATING CURRENT, CALCULATED ACCORDING TO THE SIZE OF POWER [A]
SWITCH
– In: PROTECTION OF RATED CURRENT [A]
– Ith: SETTING THE CURRENT RESPONSE THERMAL PROTECTION [A]
– Idn: CALIBRATION OF DIFFERENTIAL CURRENT [A]
– Im: CALIBRATION OF MAGNETIC ACTION OF THE PROTECTION OF CURRENT [A]
CONTACTOR
– In: CONTACTOR SIZE [A]
– Pn: SCOPE OF CONTACTOR [kW]
TA
– I1n/I2n: CONVERSION RATIO OF CURRENT [A / A]
TV
– V1n/V2n: CONVERSION RATIO OF NOMINAL [v / v]
POWER LINE
– Iz: PERMISSIBLE CURRENT CABLE, CALCULATED ON THE BASIS OF FLOW RATE AND COEFFICIENTS DERATING ARISING FROM THE INSTALLATION MODE [A]
– Cdt in Ib: PARTIAL LOSS OF POWER (PIPELINE DUE TO USERS ONLY) AND THE CURRENT Ib cosj NOMINAL [%]
– Cdt tot. in Ib: DROP VOLTAGE TOTAL (FROM THE VALLEY TO THE PROVISION OF USERS) AND THE CURRENT Ib cosj NOMINAL [%]
– Zk: MINIMUM IMPEDANCE FAULT OR THREE–PHASE NEUTRAL DOWNSTREAM USERS [mW]
– Zs: Minimal impedance of phase–earth fault DOWNSTREAM USERS [mW]
– Ik trifas. / SINGLE–PHASE.: MAXIMUM SHORT CIRCUIT CURRENT PHASE PERMANENT NEUTRAL–PHASE OR DOWNSTREAM USERS [kA]
– Ik1 phase / earth: MAXIMUM SHORT CIRCUIT CURRENT PHASE–GROUND DOWNSTREAM USERS [kA]

NOTE NUMĂRUL (VEZI FIŞELE ULTERIOARE)
(1) SEMNAL SAU DE COMANDĂ DE LA LA–SISTEM DE SUPRAVEGHERE
(2) INTERBLOCARE CU VM SWITCH RELATIVE
(3) BLOCUL BUTON CU LOCK
(4) SWITCH DESCHIDERE BUTTON ŞI DE ÎNCHIDERE:
¨ IGEN1 SWITCHES IGEN2 VOR FI ELECTRICE INTERBLOCATĂ PERMIT ACEST LUCRU NUMAI PARALEL TEMPORARE DINTRE TR1 ŞI TR2
¨ COMUTATOR MOTORIZAT POATE FI CONTROLATĂ PRIN SISTEMUL DE SUPRAVEGHERE
(5) SISTEM DE COMUNICAŢII RS485 SERIAL DE SUPRAVEGHERE
(6) LEGĂTURILE DINTRE SPD ŞI COLECTORUL DE PE SOL A PANOURI TREBUIE SĂ AIBĂ O LUNGIME MAI MICĂ SAU EGALĂ CU 0,5 M
(7) OPERATE DE SONDA DE TEMPERATURA LOCAL

CHEIA ABREVIERI:
– Ib: Curent de operare, calculat în conformitate cu DIMENSIUNEA DE PUTERE [A]
SWITCH
– În: PROTECŢIA A Curent nominal [A]
– Ith: STABILIRE PROTECŢIA RĂSPUNS ACTUAL termică [A]
– Idn: CALIBRAREA DIFERENTIAL curent [A]
– Im: CALIBRAREA DE ACŢIUNE MAGNETICE DE PROTECŢIE A curent [A]
CONTACTOR
– În: SIZE CONTACTOR [A]
– Pn: DOMENIUL DE APLICARE A CONTACTOR [kW]
TA
– I1n/I2n: rata de conversie a curentului [A / A]
televizor
– V1n/V2n: rata de conversie nominală de [v / v]
POWER LINE
– Iz: CABLU ADMISE CURENT, calculată pe baza debitului şi coeficienţii de declasare REZULTATE DIN MODUL DE INSTALARE [A]
– Cdt în Ib: pierderi parţiale de putere (PIPELINE CAUZA utilizatorilor numai), iar curentul Ib cosj NOMINALE [%]
– Cdt tot. în Ib: tensiunea totală DROP (DIN vale la dispoziţie de utilizatori) şi curentul Ib cosj NOMINALE [%]
– ZK: FAULT impedanta MINIMUM sau trei faze UTILIZATORI NEUTRE DOWNSTREAM [mW]
– Zs: impedanta minima de fază–pământ vina DOWNSTREAM Utilizatori [mW]
– Trifas Ik / SINGLE–PHASE: MAXIM Curent de scurt CIRCUIT FAZA utilizatori permanenti NEUTRE–FAZA sau în aval [kA]..
– Ik1 faza / pământ: maximă a circuitului, Curent de scurt FAZA–SOL UTILIZATORII DIN AVAL [kA]

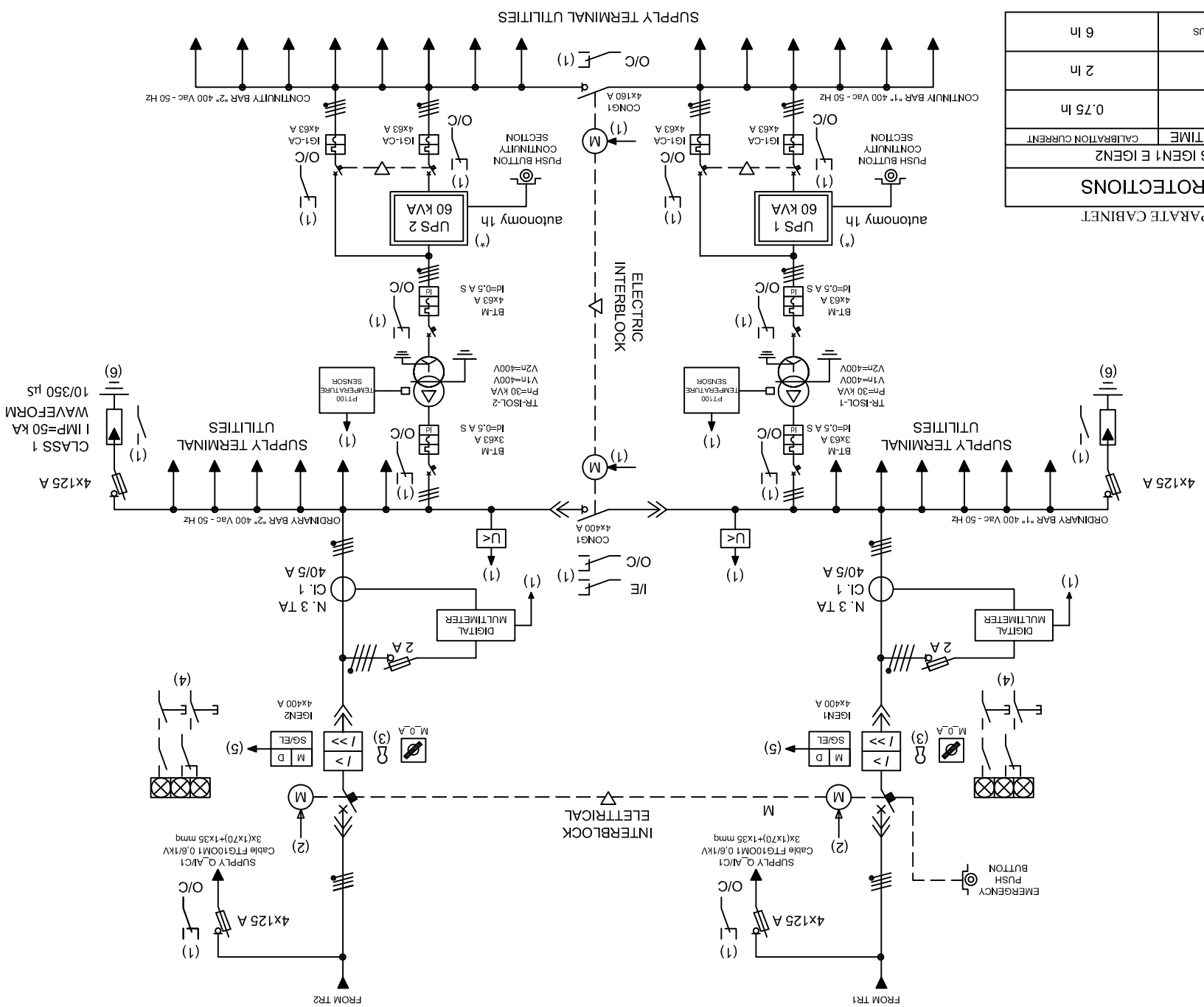

(*) DEVICE INSTALLED IN A SEPARATE CABINET

CALIBRATION PROTECTIONS		
CIRCUIT BREAKERS IGEN1 E IGEN2		
THRESHOLD	CALIBRATION TIME	CALIBRATION CURRENT
LONG DELAY (L)	3s	0.75 In
SHORT DELAY (S)	0.5s	2 In
INSTANTANEOUS (I)	INSTANTANEOUS	6 In

ORDINARY BAR "1" 400 Vac - 50 Hz

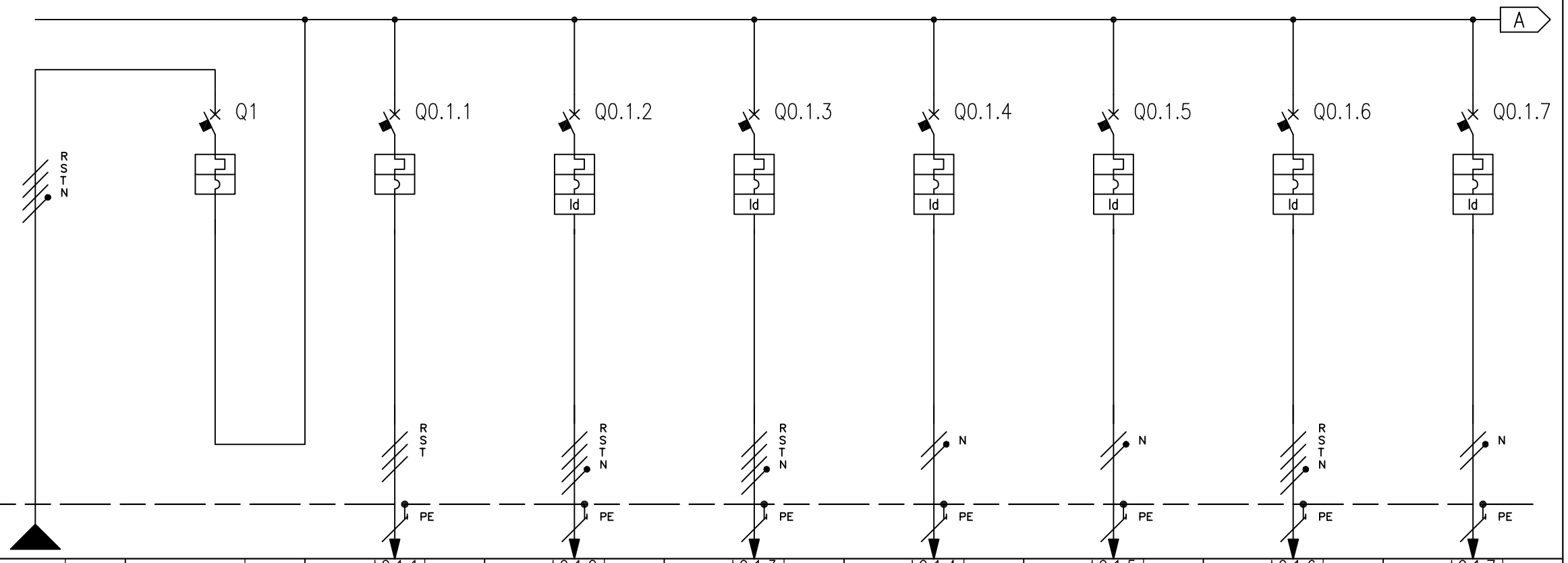

			1	2	3	4	5	6	7	8	9
TERMINAL NUMBER/TERMINAL NUMARUL											
NUMBER OF CIRCUIT NUMARUL DE CIRCUIT	DISTRIBUTION DISTRIBUTION		RSTNPE	1	L0.1.1 2 RSTPE	L0.1.2 3 RSTNPE	L0.1.3 4 RSTNPE	L0.1.4 5 RNPE	L0.1.5 6 RNPE	L0.1.6 7 RSTNPE	L0.1.7 8 RNPE
DESCRIPTION OF THE CIRCUIT DESCRIREA A CIRCUITULUI			AE1 ARRIVAL FROM QMT_PE		AL1 FIRE PROTECTION PANEL	AL2 FIRE BRIBAGE SOCKETS SAFE AREA PANEL	AL3 WAREHOUSE + DISTRU. ROOM LIGHTING	AL4 WAREHOUSE + DISTRU. SOCKETS	AL5 MV ROOMS LIGHTING	AL6 MV ROOMS SOCKETS	AL7 RADIO AND LV ROOMS LIGHTING
TYPE APPARATUS/TIP APARATURA				NSX400 N	C60 H	C60 L	C60 L	C60 H	C60 H	C60 L	C60 H
SWITCH/SWITCH	Icu [kA]			50	15	25	25	30	30	25	30
	N. POLI	In [A]		4P 400	3P 63	4P 25	4P 10	2P 16	2P 10	4P 16	2P 10
	CURVE RELEASES/CURBA DE PRESA			MicroL2.3	C	C	C	C	C	C	C
	Ir [A]	tr [s]		171 0,95x	63	25	10	16	10	16	10
	Isd [A]	tsd [s]		1710 10x	630	250	100	160	100	160	100
	Ii [A]										
	Ig [A]	tg [s]									
DIFFERENTIAL DIFERENTIAL	TYPE/TIP	CLASS/CLASA				Vigi A si	Vigi AC	Vigi AC	Vigi AC	Vigi AC	Vigi AC
	Idn [A]	tdn [ms]				0,03 instant.	0,03 instant.	0,03 instant.	0,03 instant.	0,03 instant.	0,03 instant.
CONTACTOR	TYPE/TIP	CLASS/CLASA									
CONTACTOR	COIL [V]	N. POLE In [A]									
TERMIC	TYPE/TIP	Irth [A]									
FUSE	N.POLE	In [A]									
OTHER APP.	TYPE/TIP	MODEL									
PIPELINE/ PIPELINE	TYPE ISOLATION	POSE/INSTALAREA	EPR 13		EPR 13	EPR 13	EPR 13	EPR 13	EPR 11	EPR 13	EPR 11
	SECTION PHASE-N-PE/PEN [mmq]		1x240 1x240 1x240		1x35 1x16	1x6 1x6 1x6	1x2,5 1x2,5 1x2,5	1x4 1x4 1x4	1x2,5 1x2,5 1x2,5	1x4 1x4 1x4	1x2,5 1x2,5 1x2,5
	Ib [A]	Iz [A]	169,3 634		21,3 176	14,4 58	0,5 32	1,9 49	4,4 33	3,6 42	4,4 33
	Un [V]	Pn [kW]	400		400 11,8	400 8	400 0,25	230 0,4	230 0,9	400 2	230 0,9
BOTTOM LINE/ FUND LINE	Icc min [kA]	Icc max [kA]	7,8 9,8		4,6 6,8	0,1 0,4	0,4 1,2	0,6 1,6	0,5 1,3	0,8 2,2	0,6 1,6
	LENGHT/LUNGIMEA [m]	dV TOTAL [%]	5 0,1		25 0,2	200 3,9	25 0,1	25 0,3	20 0,7	20 0,2	15 0,5
NOTE											

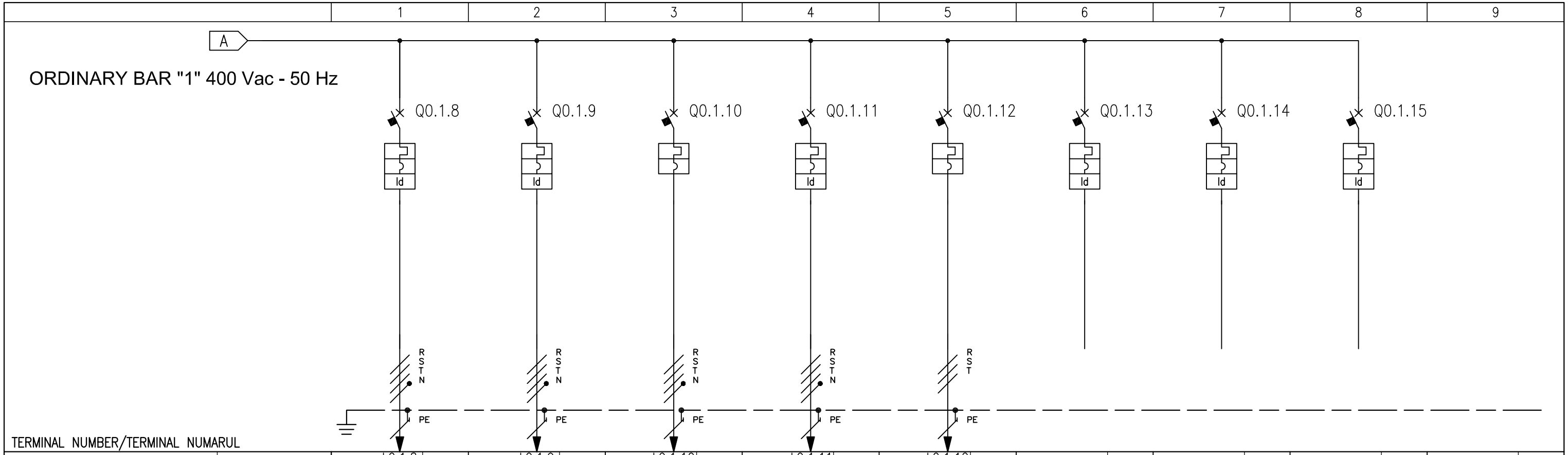

TERMINAL NUMBER/TERMINAL NUMARUL																								
NUMBER OF CIRCUIT NUMARUL DE CIRCUIT	DISTRIBUTION DISTRIBUTION		L0.1.8 9	RSTNPE		L0.1.9 10	RSTNPE		L0.1.10 11	RSTNPE		L0.1.11 12	RSTNPE		L0.1.12 13	RSTPE		14	RSTNPE		15	RSTNPE		16	RSTNPE
DESCRIPTION OF THE CIRCUIT DESCRIREA A CIRCUITULUI			AL8 LV ROOMS SOCKETS AND RADIOCOM.			AL9 POWER SUPPLY IS EQUIPMENT			AL10 MEDICAL CARE BUILDING PANEL			AL11 UPS POWER SUPPLY			AL12 POWER FACTOR CORRECTION PANEL 1			RESERVE			RESERVE			RESERVE	
TYPE APPARATUS/TIP APARATURA			C60 L			NG125 N			NG125 N			NG125 N			NG125 N			C60 L			C60 L			C60 L	
SWITCH/SWITCH	Icu [kA]		25			25			25			25			25			25			25			25	
	N. POLI	In [A]	4P	16		4P	100		4P	32		4P	50		3P	100		4P	10		4P	10		4P	10
	CURVE RELEASES/CURBA DE PRESA		C			C			C			C			D			C			C			C	
	Ir [A]	tr [s]	16			100			32			50			100			10			10			10	
	Isd [A]	tsd [s]	160			1000			320			500			1400			100			100			100	
	Ii [A]																								
	Ig [A]	tg [s]																							
DIFFERENTIAL DIFERENTIAL	TYPE/TIP	CLASS/CLASA	Vigi	AC		Vigi	A si					Vigi	AC					Vigi	A si		Vigi	A si		Vigi	A si
	Idn [A]	tdn [ms]	0,03	instant.		0,3	instant.					0,03	instant.					0,03	instant.		0,03	Istantaneo		0,03	Istantaneo
CONTACTOR	TYPE/TIP	CLASS/CLASA																							
CONTACTOR	COIL [V]	N. POLE / In [A]																							
TERMIC	TYPE/TIP	Irth [A]																							
FUSE	N.POLE	In [A]																							
OTHER APP.	TYPE/TIP	MODEL																							
PIPELINE/ PIPELINE	TYPE ISOLATION	POSE/INSTALAREA	EPR	13		EPR	13		EPR	13		EPR	13		EPR	13									
	SECTION PHASE-N-PE/PEN [mmq]		1x4	1x4	1x4	1x25	1x25	1x16	1x10	1x10	1x10	1x35	1x35	1x16	1x25		1x16								
	Ib [A]	Iz [A]	3,3	42		82,5	141		30,8	80		49,6	176		80,8	141									
	Un [V]	Pn [kW]	400	1,8		400	40		400	17,92		400			400										
BOTTOM LINE/ FUND LINE	Icc min [kA]	Icc max [kA]	1	2,8		3,9	7,3		0,4	1,2		6,4	9,1		5,6	8									
	LENGHT/LUNGIMEA[m]	dV TOTAL [%]	15	0,2		15	0,4		100	2,7		5	0,1		10	0,4									
NOTE																									

CONTINUITY BAR "1" 400 Vac - 50 Hz

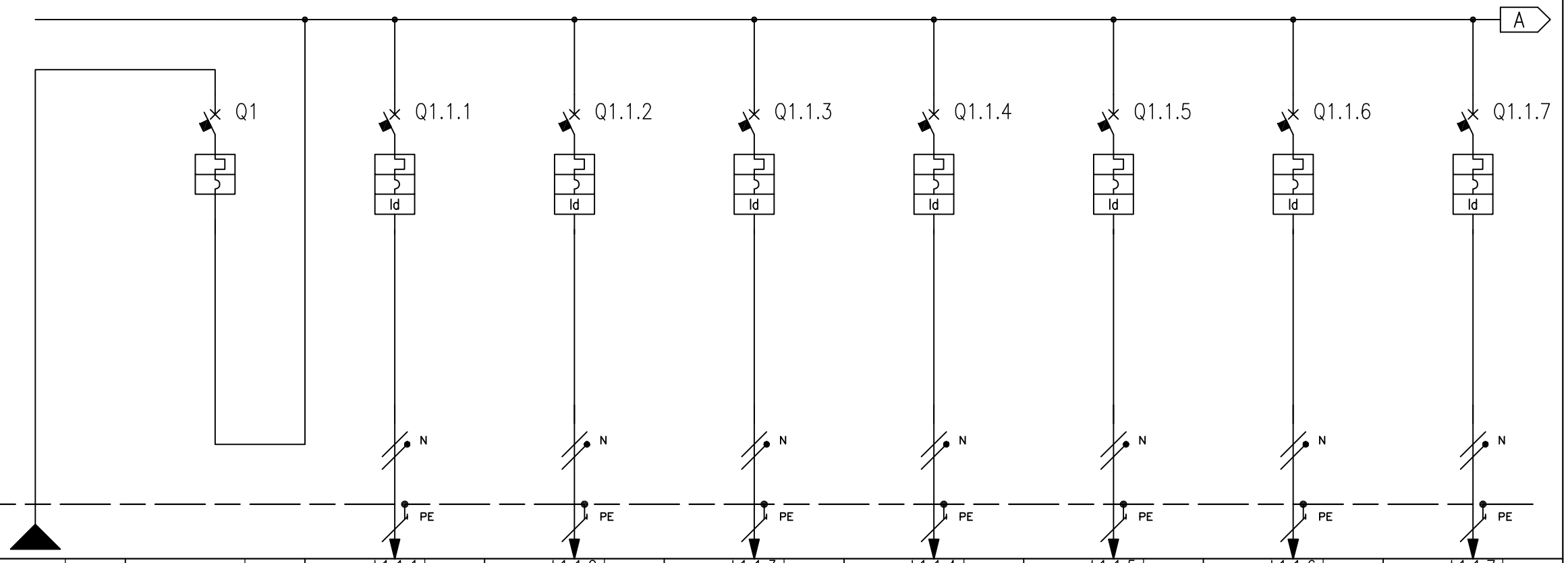

TERMINAL NUMBER/TERMINAL NUMARUL																														
NUMBER OF CIRCUIT NUMARUL DE CIRCUIT	DISTRIBUTION DISTRIBUTION		RSTNPE	1		L1.1.1 2	SNPE	L1.1.2 3	SNPE	L1.1.3 4	RNPE	L1.1.4 5	RNPE	L1.1.5 6	SNPE	L1.1.6 7	SNPE	L1.1.7 8	RNPE
DESCRIPTION OF THE CIRCUIT DESCRIREA A CIRCUITULUI		AE1 FROM UPS				ALC1 SECURITY–FIRE PROTET UNIT		ALC2 POWER SUPPLY Q_MT AUX		ALC3 POWER SUPPLY Q_BT AUX		ALC4 POWER SUPPLY QdP AUX		ALC5 SUPERVISOR SERVER SUPPLY 1		ALC6 EMERGENCY PHONES SERVER IPBOX		ALC7 POWER SUPPLY TELEPH. EMER. + DS	
TYPE APPARATUS/TIP APARATURA				NG125 N		C60 N		C60 N		C60 N		C60 N		C60 N		C60 N		C60 N	
SWITCH/SWITCH	Icu [kA]			25		20		20		20		20		20		20		20	
	N. POLI	In [A]		4P	63	2P	6	2P	16	2P	16	2P	10	2P	10	2P	10	2P	10
	CURVE RELEASES/CURBA DE PRESA			C		C		C		C		C		C		C		C	
	Ir [A]	tr [s]		63		6		16		16		10		10		10		10	
	Isd [A]	tsd [s]		630		60		160		160		100		100		100		100	
	Ii [A]																		
	Ig [A]	tg [s]																	
DIFFERENTIAL DIFERENTIAL	TYPE/TIP	CLASS/CLASA				Vigi	A si	Vigi	A si	Vigi	A si	Vigi	A si	Vigi	A si	Vigi	A si	Vigi	A si
	Idn [A]	tdn [ms]				0,03	instant.	0,03	instant.	0,03	instant.	0,03	instant.	0,03	instant.	0,03	instant.	0,03	instant.
CONTACTOR	TYPE/TIP	CLASS/CLASA																	
CONTACTOR	COIL [V]	N. POLE	In [A]																
TERMIC	TYPE/TIP	Irth [A]																	
FUSE	N.POLE	In [A]																	
OTHER APP.	TYPE/TIP	MODEL																	
PIPELINE/ PIPELINE	TYPE ISOLATION	POSE/INSTALAREA				EPR	13	EPR	13	EPR	13	EPR	13	EPR	13	EPR	13	EPR	13
	SECTION PHASE–N–PE/PEN [mmq]					1x2,5	1x2,5 1x2,5	1x2,5	1x2,5 1x2,5	1x2,5	1x2,5 1x2,5	1x2,5	1x2,5 1x2,5	1x2,5	1x2,5 1x2,5	1x2,5	1x2,5 1x2,5	1x2,5	1x2,5 1x2,5
	Ib [A]	Iz [A]				0,5	36	13,6	37	7,1	37	4,2	37	3,3	37	5,7	37	2,7	37
	Un [V]	Pn [kW]				230	0,1	230	2,5	230	1,3	230	0,96	230	0,5	230	0,85	230	0,4
BOTTOM LINE/ FUND LINE	Icc min [kA]	Icc max [kA]	9,1			0,6	1,6	0,5	1,3	4,2	6,6	0,6	1,6	0,6	1,6	0,6	1,6	0,6	1,6
	LENGHT/LUNGIMEA[m]	dV TOTAL [%]				15	0,2	20	1,8	1	0,2	15	0,6	15	0,4	15	0,6	15	0,3
NOTE																			

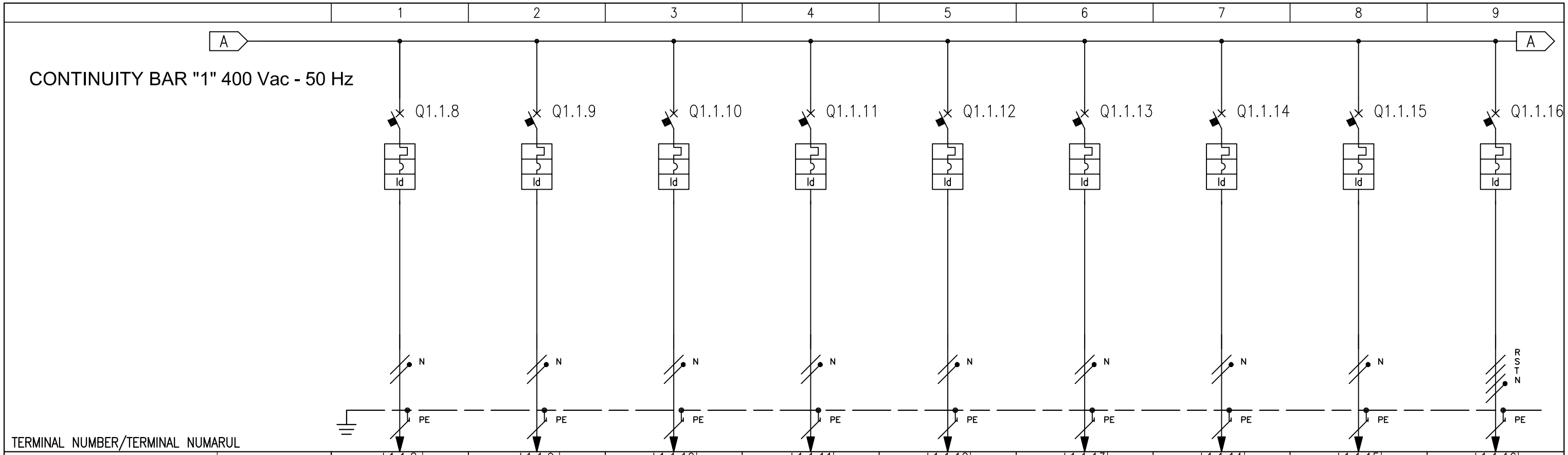

		1	2	3	4	5	6	7	8	9
TERMINAL NUMBER/TERMINAL NUMARUL										
NUMBER OF CIRCUIT / NUMARUL DE CIRCUIT	DISTRIBUTION / DISTRIBUTION	L1.1.8 9	L1.1.9 10	L1.1.10 11	L1.1.11 12	L1.1.12 13	L1.1.13 14	L1.1.14 15	L1.1.15 16	L1.1.16 17
		SNPE	RNPE	TNPE	SNPE	TNPE	RNPE	TNPE	TNPE	RSTNPE
DESCRIPTION OF THE CIRCUIT / DESCRIREA A CIRCUITULUI		ALC8 SERVER PCA VIDEO ANALISYS	ALC9 DEVICES GSM/UMTS 1	ALC10 DEVICES GSM-R GSM-R E STSI 1	ALC11 SUPERVISION MV 1	ALC12 FIRE PROTECTION CENTRAL	ALC13 RECTIFIER 230Vac/24Vcc	ALC14 AUXILIARY Q_SI	ALC15 AUXILIARY Q_AI	ALC16 ELECTRICAL PANEL Q_EL
TYPE APPARATUS/TIP APARATURA		C60 N	C60 N	C60 N	C60 N	C60 N	C60 N	C60 N	C60 N	C60 L
SWITCH/SWITCH	Icu [kA]	20	20	20	20	20	20	20	20	25
	N. POLI / In [A]	2P / 10	2P / 25	2P / 50	2P / 10	2P / 10	2P / 10	2P / 10	2P / 10	4P / 10
	CURVE RELEASES/CURBA DE PRESA	C	C	C	C	C	C	C	C	C
	Ir [A] / tr [s]	10	25	50	10	10	10	10	10	10
	Isd [A] / tsd [s]	100	250	500	100	100	100	100	100	100
	Ii [A]									
	Ig [A] / tg [s]									
DIFFERENTIAL / DIFERENTIAL	TYPE/TIP / CLASS/CLASA	Vigi / A si	Vigi / A si	Vigi / A si	Vigi / A si	Vigi / A si	Vigi / A si	Vigi / A si	Vigi / A si	Vigi / A si
	Idn [A] / tdn [ms]	0,03 / instant.	0,03 / instant.	0,03 / instant.	0,03 / instant.	0,03 / instant.	0,03 / instant.	0,03 / instant.	0,03 / instant.	0,03 / instant.
CONTACTOR	TYPE/TIP / CLASS/CLASA									
CONTACTOR	COIL [V] / N. POLE / In [A]									
TERMIC	TYPE/TIP / Irth [A]									
FUSE	N.POLE / In [A]									
OTHER APP.	TYPE/TIP / MODEL									
PIPELINE/ PIPELINE	TYPE ISOLATION / POSE/INSTALAREA	EPR / 13	EPR / 13	EPR / 13	EPR / 13	EPR / 13	EPR / 13	EPR / 13	EPR / 13	EPR / 13
	SECTION PHASE-N-PE/PEN [mmq]	1x4 / 1x4 / 1x4	1x6 / 1x6 / 1x6	1x16 / 1x16 / 1x16	1x4 / 1x4 / 1x4	1x4 / 1x4 / 1x4	1x16 / 1x16 / 1x16	1x2,5 / 1x2,5 / 1x2,5	1x2,5 / 1x2,5 / 1x2,5	1x10 / 1x10 / 1x10
	Ib [A] / Iz [A]	6,7 / 50	6,7 / 64	40,1 / 119	3,3 / 50	0,8 / 50	7,1 / 119	1,6 / 37	1,6 / 37	5,9 / 80
	Un [V] / Pn [kW]	230 / 1	230 / 1	230 / 6	230 / 0,5	230 / 0,15	230 / 1,06	230 / 0,3	230 / 0,3	400 / 3,7
BOTTOM LINE/ FUND LINE	Icc min [kA] / Icc max [kA]	1 / 2,4	1,3 / 3,1	2,7 / 5,2	1 / 2,4	1 / 2,4	2,7 / 5,2	0,4 / 1	0,4 / 1	0,4 / 1,2
	LENGHT/LUNGIMEA[m] / dV TOTAL [%]	15 / 0,4	15 / 0,3	15 / 0,6	15 / 0,3	15 / 0,2	15 / 0,2	25 / 0,4	25 / 0,4	100 / 0,6
NOTE										

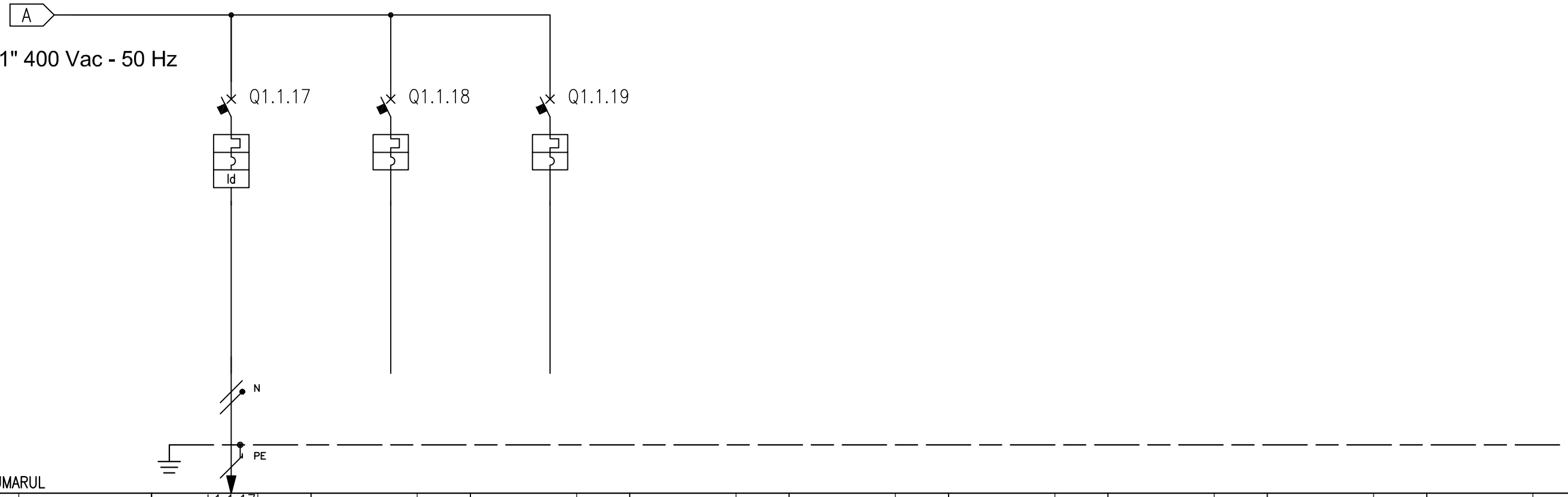

			1		2		3		4	5	6	7	8	9
TERMINAL NUMBER/TERMINAL NUMARUL			L1.1.17											
NUMBER OF CIRCUIT NUMARUL DE CIRCUIT	DISTRIBUTION DISTRIBUTION		18	SNPE	19	RSTNPE	20	RSTNPE						
DESCRIPTION OF THE CIRCUIT DESCRIREA A CIRCUITULUI			ALC16 TREATMENT TANK ELECTRICAL PANEL		RESERVE		RESERVE							
TYPE APPARATUS/TIP APARATURA			C60 N		C60 L		C60 L							
SWITCH/SWITCH	Icu [kA]		20		25		25							
	N. POLI	In [A]	2P	10	4P	10	4P	10						
	CURVE RELEASES/CURBA DE PRESA		C		C		C							
	Ir [A]	tr [s]	10		10		10							
	Isd [A]	tsd [s]	100		100		100							
	Ii [A]													
	Ig [A]	tg [s]												
DIFFERENTIAL DIFERENTIAL	TYPE/TIP	CLASS/CLASA	Vigi	A si										
	Idn [A]	tdn [ms]	0,03	instant.										
CONTACTOR	TYPE/TIP	CLASS/CLASA												
CONTACTOR	COIL [V]	N. POLE / In [A]												
TERMIC	TYPE/TIP	Irth [A]												
FUSE	N.POLE	In [A]												
OTHER APP.	TYPE/TIP	MODEL												
PIPELINE/ PIPELINE	TYPE ISOLATION	POSE/INSTALAREA	EPR	13										
	SECTION PHASE-N-PE/PEN [mmq]		1x2,5 / 1x2,5	1x2,5										
	Ib [A]	Iz [A]	4,8	37										
	Un [V]	Pn [kW]	230	1										
BOTTOM LINE/ FUND LINE	Icc min [kA]	Icc max [kA]	0,1	0,3										
	LENGHT/LUNGIMEA [m]	dV TOTAL [%]	100	3,5										
NOTE														

ORDINARY BAR "2" 400 Vac - 50 Hz

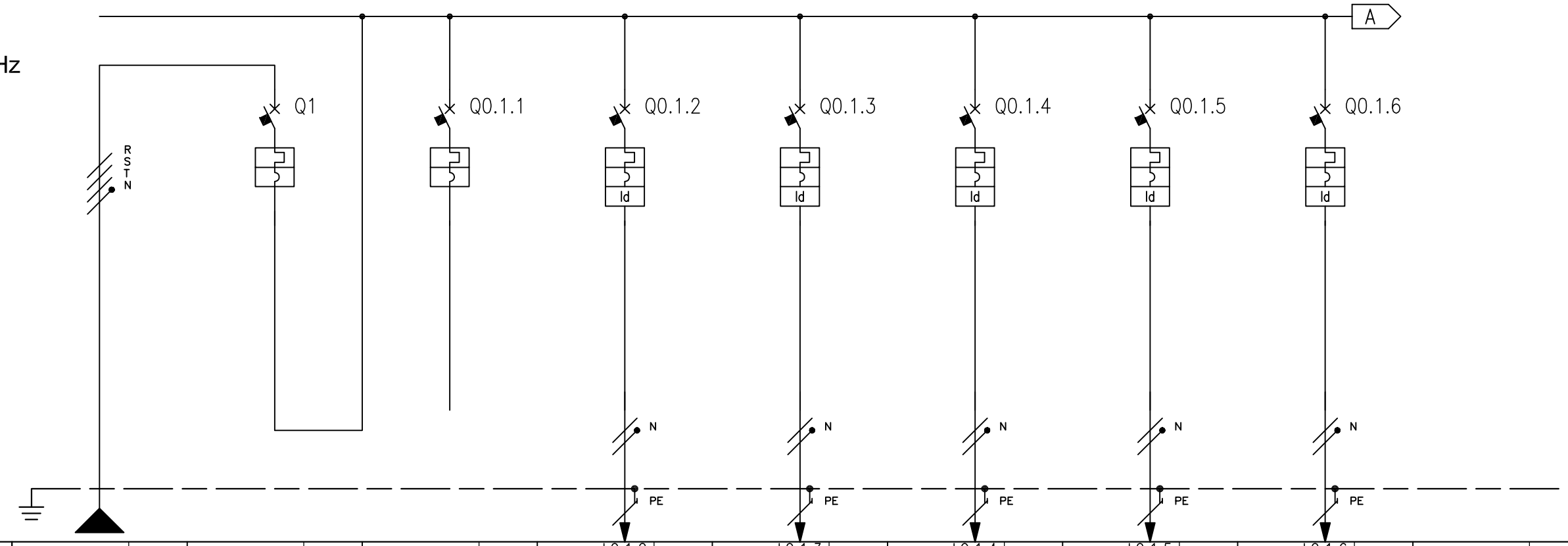

TERMINAL NUMBER/TERMINAL NUMARUL																														
NUMBER OF CIRCUIT NUMARUL DE CIRCUIT	DISTRIBUTION DISTRIBUTION			RSTNPE	1		2	RSTNPE	L0.1.2 3	RNPE	L0.1.3 4	SNPE	L0.1.4 5	TNPE	L0.1.5 6	RNPE	L0.1.6 7	SNPE		
DESCRIPTION OF THE CIRCUIT DESCRIREA A CIRCUITULUI		AE1 FROM QMT_PE					RISERVA		AL1 AIR CONDITIONING TELECOM. ROOM 1		AL2 AIR CONDITIONING TELECOM. ROOM 2		AL3 AIR CONDITIONING LV ROOM 1		AL4 AIR CONDITIONING LOCALE BT 2		AL5 AIR CONDITIONING MV ROOM			
TYPE APPARATUS/TIP APARATURA					NSX400 N		C60 L		C60 H		C60 H		C60 H		C60 H		C60 H			
SWITCH/SWITCH	Icu [kA]				50		25		30		30		30		30		30			
	N. POLI	In [A]			4P	400	4P	6	2P	40	2P	40	2P	32	2P	32	2P	32		
	CURVE RELEASES/CURBA DE PRESA				MicroL2.3		C		C		C		C		C		C			
	Ir [A]	tr [s]			144	0,9x	6		40		40		32		32		32			
	Isd [A]	tsd [s]			1440	10x	60		400		400		320		320		320			
	Ii [A]																			
	Ig [A]	tg [s]																		
DIFFERENTIAL DIFERENTIAL	TYPE/TIP	CLASS/CLASA							Vigi	AC	Vigi	AC	Vigi	AC	Vigi	AC	Vigi	AC		
	Idn [A]	tdn [ms]							0,03	instant.	0,03	instant.	0,03	instant.	0,03	instant.	0,03	instant.		
CONTACTOR	TYPE/TIP	CLASS/CLASA																		
CONTACTOR	COIL [V]	N. POLE	In [A]																	
TERMIC	TYPE/TIP	Irth [A]																		
FUSE	N.POLE	In [A]																		
OTHER APP.	TYPE/TIP	MODEL																		
PIPELINE/ PIPELINE	TYPE ISOLATION	POSE/INSTALAREA	EPR	13					EPR	13	EPR	13	EPR	13	EPR	13	EPR	13		
	SECTION PHASE-N-PE/PEN [mmq]		1x240	1x240 1x240					1x16	1x16 1x16	1x6	1x6 1x6	1x10	1x10 1x10	1x10	1x10 1x10	1x10	1x10 1x10		
	Ib [A]	Iz [A]	131,9	634					28	115	28	63	16,9	86	16,9	86	16,9	86		
	Un [V]	Pn [kW]	400						230	5,8	230	5,8	230	3,5	230	3,5	230	3,5		
BOTTOM LINE/ FUND LINE	Icc min [kA]	Icc max [kA]	7,8	9,8					2,5	4,9	1,1	2,7	2,1	4,5	2,1	4,5	2,1	4,5		
	LENGHT/LUNGIMEA[m]	dV TOTAL [%]	5	0					20	0,7	20	1,7	15	0,5	15	0,5	15	0,5		
NOTE																				

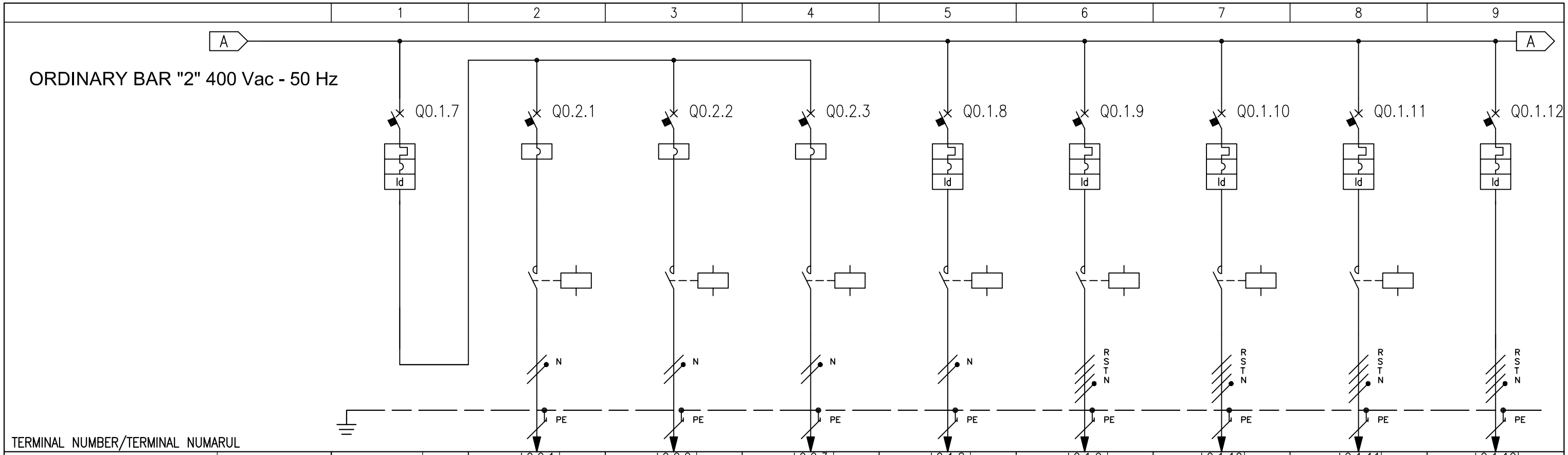

		1	2	3	4	5	6	7	8	9
TERMINAL NUMBER/TERMINAL NUMARUL										
NUMBER OF CIRCUIT NUMARUL DE CIRCUIT	DISTRIBUTION DISTRIBUTION	8 RSTNPE	L0.2.1 9 TNPE	L0.2.2 10 TNPE	L0.2.3 11 RNPE	L0.1.8 12 RNPE	L0.1.9 13 RSTNPE	L0.1.10 14 RSTNPE	L0.1.11 15 RSTNPE	L0.1.12 16 RSTNPE
DESCRIPTION OF THE CIRCUIT DESCRIREA A CIRCUITULUI		AL6 DIFFERENTIAL FANS	9 FAN 1 TRANSF. ROOM	10 FAN 2 TRANSF ROOM	11 FAN 3 TRANSF. ROOM	AL7 OUTDOOR LIGHTING SUBSTATION	AL8 SAFE AREA LIGHTING 1	AL9 SAFE AREA LIGHTING 2	AL10 ROAD LAMP LIGHTING	AL11 POWER SUPPLY IS DEVICES
TYPE APPARATUS/TIP APARATURA		C60 L	NG125 LMA	NG125 LMA	NG125 LMA	C60 H	C60 L	C60 L	C60 L	NG125 N
SWITCH/SWITCH	Icu [kA]	25	100	100	100	30	25	25	25	25
	N. POLI / In [A]	4P / 6	2P / 6.3	2P / 6.3	2P / 6.3	2P / 32	4P / 32	4P / 32	4P / 32	4P / 100
	CURVE RELEASES/CURBA DE PRESA	C	MA	MA	MA	C	C	C	C	C
	Ir [A] / tr [s]	6				32	32	32	32	100
	Isd [A] / tsd [s]	60	76	76	76	320	320	320	320	1000
	Ii [A]									
	Ig [A] / tg [s]									
DIFFERENTIAL DIFERENTIAL	TYPE/TIP / CLASS/CLASA	Vigi / A si				Vigi / AC	Vigi / AC	Vigi / AC	Vigi / AC	Vigi / A si
	Idn [A] / tdn [ms]	0,03 / instant.				0,03 / instant.	0,03 / instant.	0,03 / instant.	0,03 / instant.	0,3 / instant.
CONTACTOR	TYPE/TIP / CLASS/CLASA		LC1D09 / AC1	LC1D09 / AC1	LC1D09 / AC1	LC1D09 / AC1	LC1D09 / AC1	LC1D09 / AC1	LC1D09 / AC1	
CONTACTOR	COIL [V] / N. POLE / In [A]		230 / 3 pole / 25	230 / 3 pole / 25	230 / 3 pole / 25	230 / 3 pole / 25	230 / 4 pole / 25	230 / 4 pole / 25	230 / 4 pole / 25	
TERMIC	TYPE/TIP / Irth [A]									
FUSE	N.POLE / In [A]									
OTHER APP.	TYPE/TIP / MODEL									
PIPELINE/ PIPELINE	TYPE ISOLATION / POSE/INSTALAREA		EPR / 13	EPR / 13	EPR / 13	EPR / 13	EPR / 13	EPR / 13	EPR / 13	EPR / 11
	SECTION PHASE–N–PE/PEN [mmq]		1x2,5 / 1x2,5 / 1x2,5	1x2,5 / 1x2,5 / 1x2,5	1x2,5 / 1x2,5 / 1x2,5	1x2,5 / 1x2,5 / 1x2,5	1x16 / 1x16 / 1x16	1x16 / 1x16 / 1x16	1x16 / 1x16 / 1x16	1x16 / 1x16 / 1x16
	Ib [A] / Iz [A]		1,5 / 36	1,5 / 36	1,5 / 36	0,5 / 37	3,9 / 107	3,9 / 107	1,6 / 107	82,5 / 107
	Un [V] / Pn [kW]		230 / 0,33	230 / 0,33	230 / 0,33	230 / 0,1	400 / 2,4	400 / 2,4	400 / 1	400 / 40
BOTTOM LINE/ FUND LINE	Icc min [kA] / Icc max [kA]		0,4 / 1	0,4 / 1	0,4 / 1	0,2 / 0,5	0,7 / 2	0,5 / 1,5	0,2 / 0,6	3 / 6,4
	LENGHT/LUNGIMEA[m] / dV TOTAL [%]		25 / 0,3	25 / 0,3	25 / 0,3	50 / 0,2	90 / 0,2	120 / 0,3	320 / 0,3	15 / 0,6
NOTE										

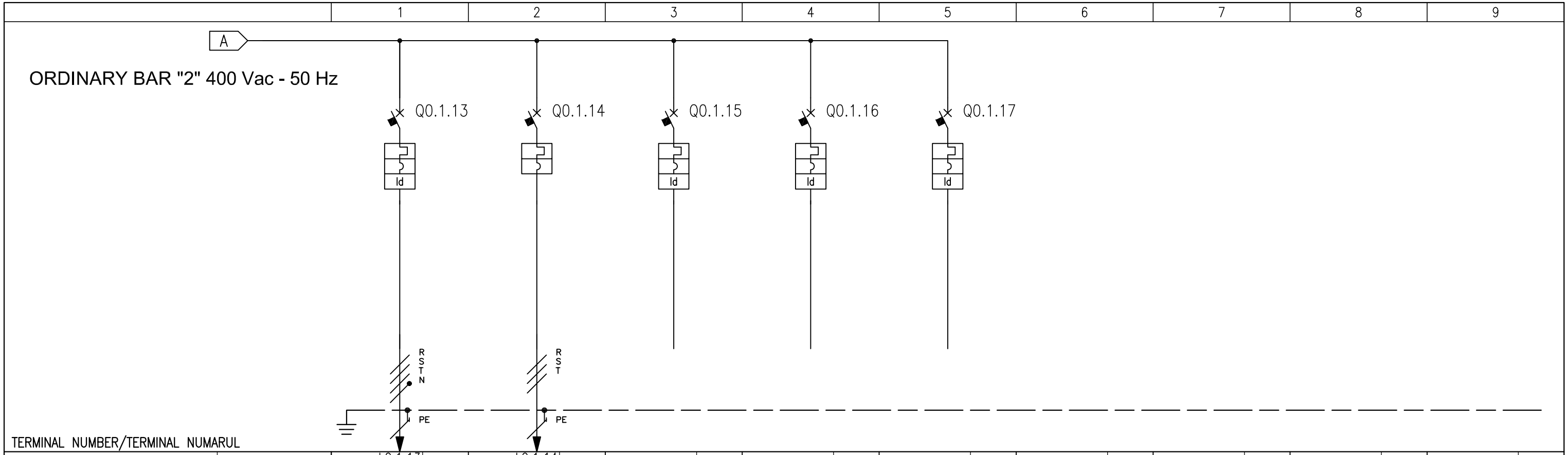

			1	2	3	4	5	6	7	8	9
TERMINAL NUMBER/TERMINAL NUMARUL			L0.1.13	L0.1.14							
NUMBER OF CIRCUIT NUMARUL DE CIRCUIT	DISTRIBUTION DISTRIBUTION		17 RSTNPE	18 RSTPE	19 RSTNPE	20 RSTNPE	21 RSTNPE				
DESCRIPTION OF THE CIRCUIT DESCRIREA A CIRCUITULUI			AL12 POWER SUPPLY UPS AUX	AL13 POWER FACTOR CORRECTION PANEL 2	RESERVE	RESERVE	RESERVE				
TYPE APPARATUS/TIP APARATURA			NG125 N	NG125 N	C60 L	C60 L	C60 L				
SWITCH/SWITCH	Icu [kA]		25	25	25	25	25				
	N. POLI	In [A]	4P 50	3P 80	4P 10	4P 10	4P 10				
	CURVE RELEASES/CURBA DE PRESA		C	D	C	C	C				
	Ir [A]	tr [s]	50	80	10	10	10				
	Isd [A]	tsd [s]	500	1120	100	100	100				
	Ii [A]										
	Ig [A]	tg [s]									
DIFFERENTIAL DIFERENTIAL	TYPE/TIP	CLASS/CLASA	Vigi AC		Vigi A si	Vigi A si	Vigi A si				
	Idn [A]	tdn [ms]	0,03 instant.		0,03 instant.	0,03 instant.	0,03 instant.				
CONTACTOR	TYPE/TIP	CLASS/CLASA									
CONTACTOR	COIL [V] N. POLE	In [A]									
TERMIC	TYPE/TIP	Irth [A]									
FUSE	N.POLE	In [A]									
OTHER APP.	TYPE/TIP	MODEL									
PIPELINE/ PIPELINE	TYPE ISOLATION	POSE/INSTALAREA	EPR 13	EPR 13							
	SECTION PHASE-N-PE/PEN [mmq]		1x35 1x35 1x16	1x25 1x16							
	Ib [A]	Iz [A]	42,3 176	58,4 141							
	Un [V]	Pn [kW]	400	400							
BOTTOM LINE/ FUND LINE	Icc min [kA]	Icc max [kA]	6,4 9,1	5,6 8							
	LENGHT/LUNGIMEA[m]	dV TOTAL [%]	5 0,1	10 0,3							
NOTE											

CONTINUITY BAR "2" 400 Vac - 50 Hz

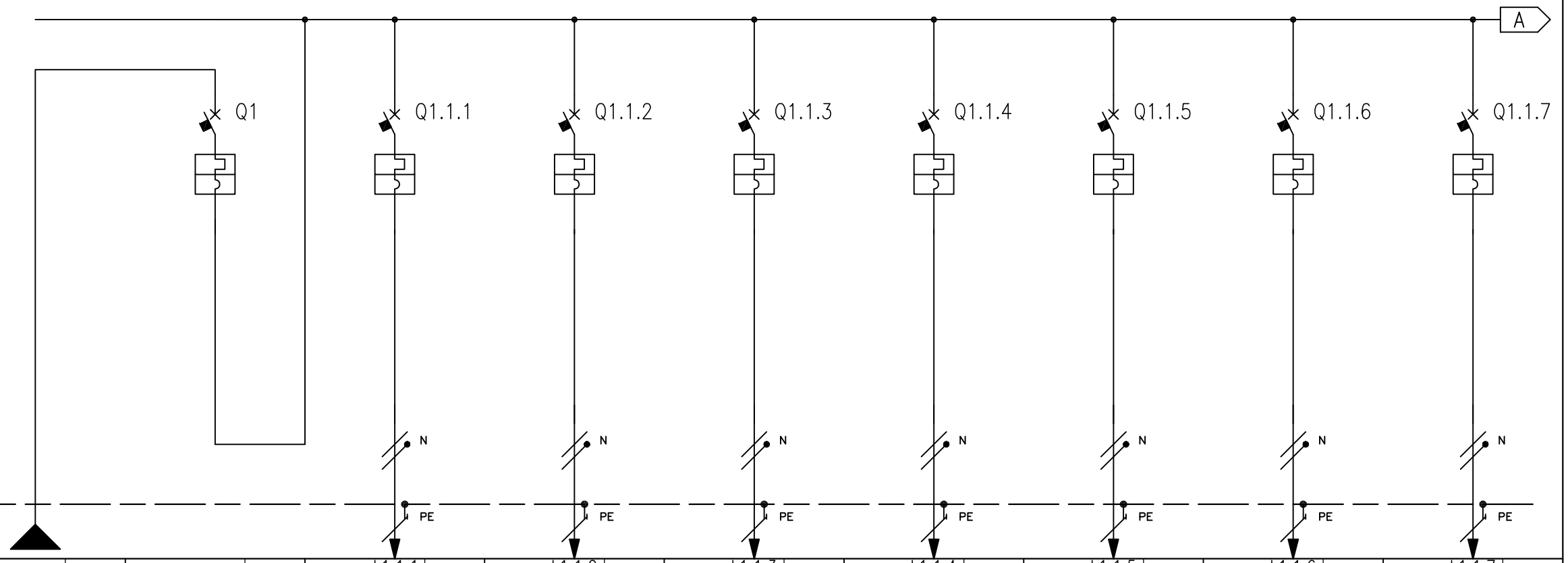

TERMINAL NUMBER/TERMINAL NUMARUL																													
NUMBER OF CIRCUIT NUMARUL DE CIRCUIT	DISTRIBUTION DISTRIBUTION		RSTNPE	1		L1.1.1 2	RNPE	L1.1.2 3	SNPE	L1.1.3 4	TNPE	L1.1.4 5	RNPE	L1.1.5 6	SNPE	L1.1.6 7	TNPE	L1.1.7 8	RNPE
DESCRIPTION OF THE CIRCUIT DESCRIREA A CIRCUITULUI		AE1 FROM UPS				ALC1 SUPERVISION SERVER SUPPLY 2		ALC2 SERVER EMERGENCY PHONES IPBOX 2		ALC3 POWER SUPPLY EMERG. SUBSTATION		ALC4 SOCKETS TELECOM ROOM		ALC5 SERVER PCA VIDEO ANALISYS 2		ALC6 TELECAMERAS TELECOM ROOM		ALC7 DEVICES GSM/UMTS 2	
TYPE APPARATUS/TIP APARATURA				NG125 N		C60 L		C60 L		C60 L		C60 L		C60 L		C60 L		C60 L	
SWITCH/SWITCH	Icu [kA]			25		50		50		50		50		50		50		50	
	N. POLI	In [A]		4P	63	2P	10	2P	10	2P	10	2P	10	2P	10	2P	10	2P	25
	CURVE RELEASES/CURBA DE PRESA			C		C		C		C		C		C		C		C	
	Ir [A]	tr [s]		63		10		10		10		10		10		10		25	
	Isd [A]	tsd [s]		630		100		100		100		100		100		100		250	
	Ii [A]																		
	Ig [A]	tg [s]																	
DIFFERENTIAL DIFERENTIAL	TYPE/TIP	CLASS/CLASA																	
	Idn [A]	tdn [ms]																	
CONTACTOR	TYPE/TIP	CLASS/CLASA																	
CONTACTOR	COIL [V]	N. POLE	In [A]																
TERMIC	TYPE/TIP	Irth [A]																	
FUSE	N.POLE	In [A]																	
OTHER APP.	TYPE/TIP	MODEL																	
PIPELINE/ PIPELINE	TYPE ISOLATION	POSE/INSTALAREA				EPR	13	EPR	13	EPR	13	EPR	13	EPR	13	EPR	13	EPR	13
	SECTION PHASE-N-PE/PEN [mmq]					1x2,5	1x2,5	1x2,5	1x2,5	1x2,5	1x2,5	1x4	1x4	1x4	1x4	1x4	1x4	1x6	1x6
	Ib [A]	Iz [A]				3,3	37	5,7	37	2,9	36	5,4	49	6,7	50	5,4	49	6,7	64
	Un [V]	Pn [kW]				230	0,5	230	0,85	230	0,6	230	1	230	1	230	1	230	1
BOTTOM LINE/ FUND LINE	Icc min [kA]	Icc max [kA]	9,1			0,6	1,6	0,6	1,6	0,4	1	0,6	1,6	1	2,4	0,6	1,6	1,3	3,1
	LENGHT/LUNGIMEA[m]	dV TOTAL [%]				15	0,4	15	0,5	25	0,6	25	0,6	15	0,4	25	0,6	15	0,3
NOTE																			

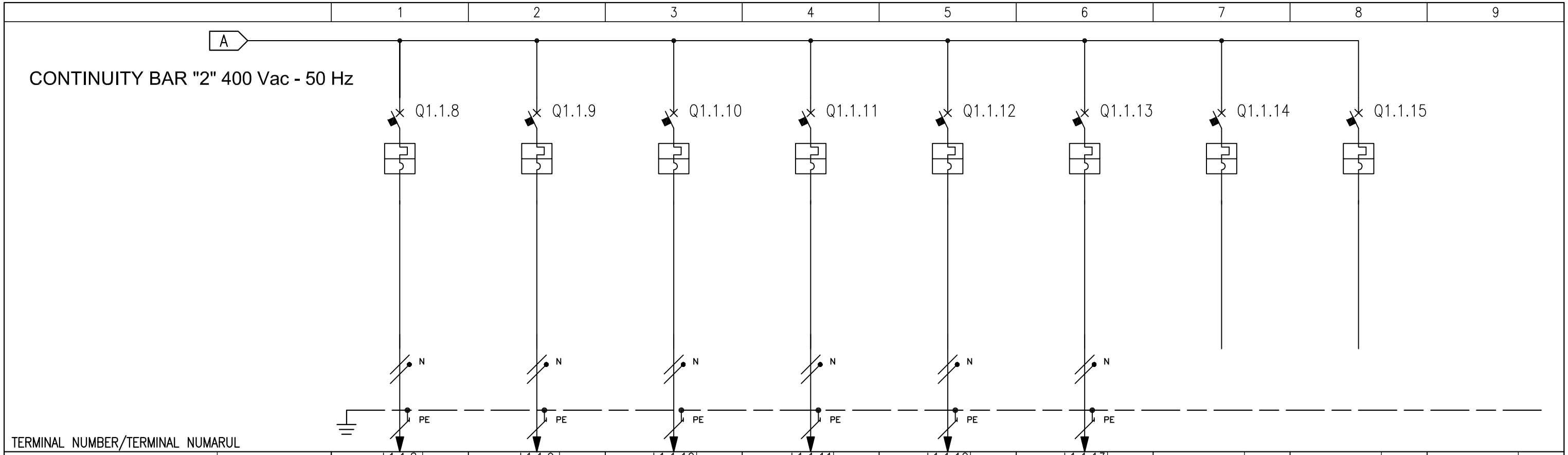

			1	2	3	4	5	6	7	8	9
TERMINAL NUMBER/TERMINAL NUMARUL											
NUMBER OF CIRCUIT NUMARUL DE CIRCUIT	DISTRIBUTION DISTRIBUTION		L1.1.8 9	L1.1.9 10	L1.1.10 11	L1.1.11 12	L1.1.12 13	L1.1.13 14	15	16	
			TNPE	TNPE	RNPE	SNPE	SNPE	SNPE	RSTNPE	RSTNPE	
DESCRIPTION OF THE CIRCUIT DESCRIREA A CIRCUITULUI			ALC8 DEVICES GSM-R STSI 2	ALC9 FIRE PROTECTION CENTRAL 2	ALC10 SUPERVISION MV 2	ALC11 RECTIFIER 2 230Vac/24Vcc	ALC12 AUSILIARY Q_SI	ALC13 AUSILIARY Q_AI	RISERVE	RISERVE	
TYPE APPARATUS/TIP APARATURA			C60 L	C60 L	C60 L	C60 L	C60 L	C60 L	C60 L	C60 L	
SWITCH/SWITCH	Icu [kA]		40	50	50	50	50	50	25	25	
	N. POLI	In [A]	2P 40	2P 10	2P 10	2P 10	2P 10	2P 10	4P 10	4P 10	
	CURVE RELEASES/CURBA DE PRESA		C	C	C	C	C	C	C	C	
	Ir [A]	tr [s]	40	10	10	10	10	10	10	10	
	Isd [A]	tsd [s]	400	100	100	100	100	100	100	100	
	Ii [A]										
	Ig [A]	tg [s]									
DIFFERENTIAL DIFERENTIAL	TYPE/TIP	CLASS/CLASA									
	Idn [A]	tdn [ms]									
CONTACTOR	TYPE/TIP	CLASS/CLASA									
CONTACTOR	COIL [V]	N. POLE / In [A]									
TERMIC	TYPE/TIP	Irth [A]									
FUSE	N.POLE	In [A]									
OTHER APP.	TYPE/TIP	MODEL									
PIPELINE/ PIPELINE	TYPE ISOLATION	POSE/INSTALAREA	EPR 13	EPR 13	EPR 13	EPR 13	EPR 13	EPR 13			
	SECTION PHASE-N-PE/PEN [mmq]		1x16 1x16 1x16	1x4 1x4 1x4	1x4 1x4 1x4	1x16 1x16 1x16	1x2,5 1x2,5 1x2,5	1x2,5 1x2,5 1x2,5			
	Ib [A]	Iz [A]	33,5 119	0,8 50	3,3 50	7,1 119	1,6 37	1,6 37			
	Un [V]	Pn [kW]	230 5	230 0,15	230 0,5	230 1,06	230 0,3	230 0,3			
BOTTOM LINE/ FUND LINE	Icc min [kA]	Icc max [kA]	2,7 5,2	1 2,4	1 2,4	2,7 5,2	0,4 1	0,4 1			
	LENGHT/LUNGIMEA[m]	dV TOTAL [%]	15 0,5	15 0,1	15 0,3	15 0,2	25 0,3	25 0,3			
NOTE											

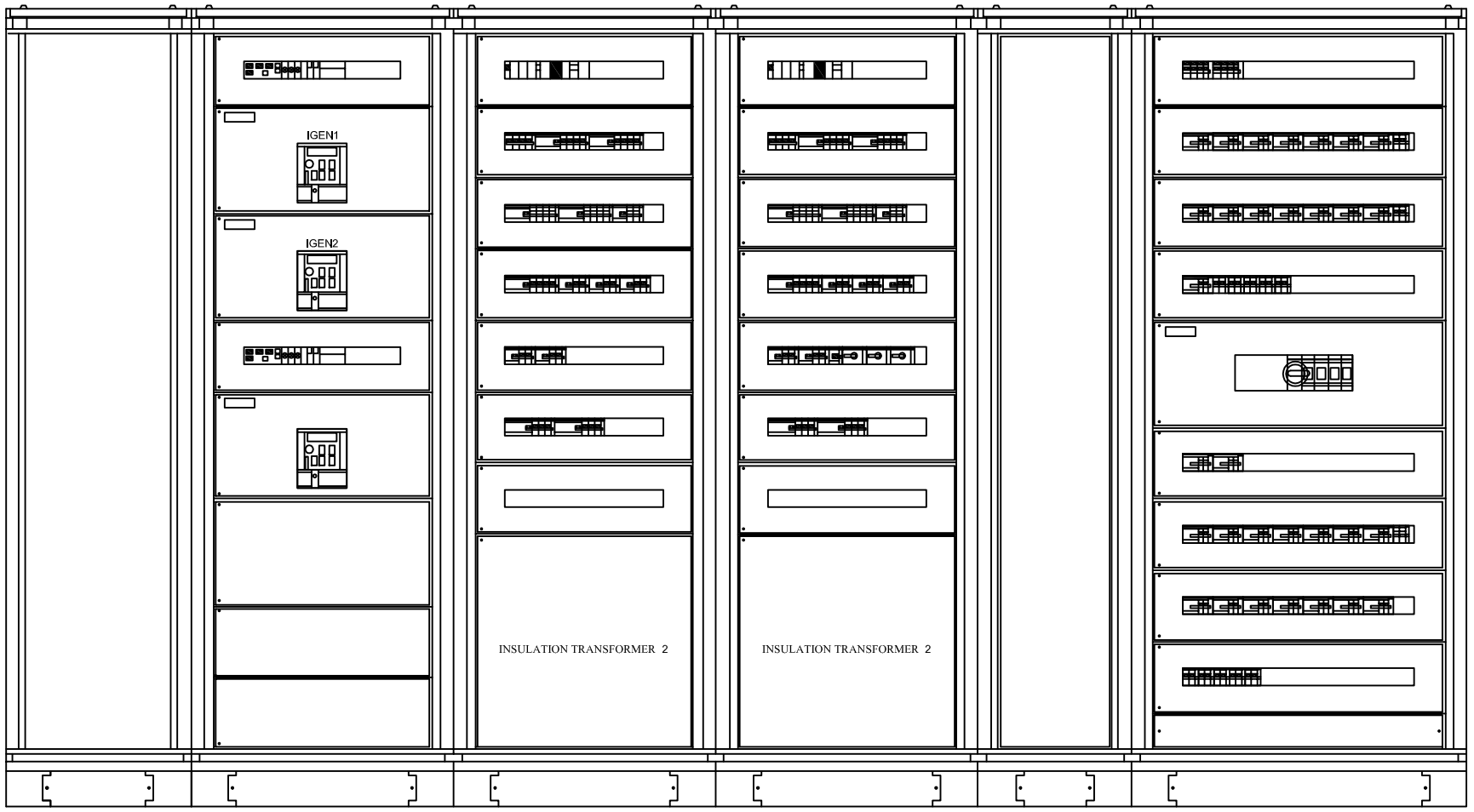

2231
6371
3943

	GENERAL GRAPHIC SIGN TRANSFORMER/GENERAL GRAFIC INSCRIERE TRANSFORMER		ROTARY MACHINE OR SYSTEM WITH ROTARY MACHINE/MASINA ROTATIV SAU SISTEM CU MASINA ROTATIV G = GENERATOR/GENERATOR; M = MOTOR/MOTOARE; GS = SYNCHRONOUS GENERATOR/SINCRON GENERATOR; MS = SYNCHRONOUS MOTOR/MOTOR SINCRON; GE = GENERATING SET/GENERATOR
	TWO WINDING TRANSFORMER WITH SCREEN- ISOLATION TRANSFORMER/TRANSFORMATOR CU DOUĂ ÎNTOARCEREA MONITOR-TRANSFORMER DE IZOLARE		POWER CONVERTER SIGN GRAPHIC GENERAL/CONVERTOR DE PUTERE SEMNUL GRAFIC GENERALE
	CENTRAL WITH SOCKET TRANSFORMER ON A WINDING/transformator CU PRIZA CENTRALE PE O LICHIDAREA		RECTIFIER/RECTIFIER
	THREE-PHASE TRANSFORMER CONNECTIONS STAR TRIANGLE/TRIFAZAT TRANSFORMER CONEXIUNI STAR TRIANGLE		CURRENT CONVERTER IN ALTERNATING/CONVERTOR CURENT N ALTERNANTA (INVERTER)
	TRANSFORMER SECURITY/TRANSFORMATOR SECURITATE		STATIC SWITCH/STATICE SWITCH
	AUTOTRANSFORMER/AUTOTRANSFORMATOR		GATEWAY
△	THREE-PHASE TRIANGLE WINDING/LICHIDARE TREI FAZE UN TRIUNGHI	———	SERIAL NETWORK RS485/SERIAL REȚEA RS485
△	TRIANGLE OPEN PHASE WINDING/TRIANGLE OPEN PHASE WINDING OPEN	———	NETWORK OF LOGIC SELECTIVITY COMMUNICATION/REȚEAUA DE COMUNICARE SELECTIVITĂȚII LOGICĂ
	STAR PHASE WINDING/LICHIDARE TREI FAZE STEA	———	WIRING DEVICES FOR PROTECTION/CABLARE DISPOZITIVE DE PROTECȚIE
	THREE PHASE STAR WIND WITH NEUTRAL ACCESSIBLE BY EXTERNAL/LICHIDARE TREI FAZE STEA CU NEUTRU ACCES EXTERNE		
	THREE-PHASE WINDING AT ZIG-ZAG/LICHIDARE TREI FAZE ZIG-ZAG		

	GENERAL GRAPHIC SIGN TRANSFORMER/GENERAL GRAFIC INSCRIERE TRANSFORMER		ROTARY MACHINE OR SYSTEM WITH ROTARY MACHINE/MASINA ROTATIV SAU SISTEM CU MASINA ROTATIV G = GENERATOR/GENERATOR; M = MOTOR/MOTOARE; GS = SYNCHRONOUS GENERATOR/SINCRON GENERATOR; MS = SYNCHRONOUS MOTOR/MOTOR SINCRON; GE = GENERATING SET/GENERATOR
	TWO WINDING TRANSFORMER WITH SCREEN- ISOLATION TRANSFORMER/TRANSFORMATOR CU DOUĂ ÎNTOARCEREA MONITOR-TRANSFORMER DE IZOLARE		POWER CONVERTER SIGN GRAPHIC GENERAL/CONVERTOR DE PUTERE SEMNUL GRAFIC GENERALE
	CENTRAL WITH SOCKET TRANSFORMER ON A WINDING/transformator CU PRIZA CENTRALE PE O LICHIDAREA		RECTIFIER/RECTIFIER
	THREE-PHASE TRANSFORMER CONNECTIONS STAR TRIANGLE/TRIFAZAT TRANSFORMER CONEXIUNI STAR TRIANGLE		CURRENT CONVERTER IN ALTERNATING/CONVERTOR CURENT N ALTERNANTA (INVERTER)
	TRANSFORMER SECURITY/TRANSFORMATOR SECURITATE		STATIC SWITCH/STATICE SWITCH
	AUTOTRANSFORMER/AUTOTRANSFORMATOR		GATEWAY
△	THREE-PHASE TRIANGLE WINDING/LICHIDARE TREI FAZE UN TRIUNGHI	———	SERIAL NETWORK RS485/SERIAL REȚEA RS485
△	TRIANGLE OPEN PHASE WINDING/TRIANGLE OPEN PHASE WINDING OPEN	———	NETWORK OF LOGIC SELECTIVITY COMMUNICATION/REȚEAUA DE COMUNICARE SELECTIVITĂȚII LOGICĂ
	STAR PHASE WINDING/LICHIDARE TREI FAZE STEA	———	WIRING DEVICES FOR PROTECTION/CABLARE DISPOZITIVE DE PROTECȚIE
	THREE PHASE STAR WIND WITH NEUTRAL ACCESSIBLE BY EXTERNAL/LICHIDARE TREI FAZE STEA CU NEUTRU ACCES EXTERNE		
	THREE-PHASE WINDING AT ZIG-ZAG/LICHIDARE TREI FAZE ZIG-ZAG		

	GENERAL GRAPHIC SIGN TRANSFORMER/GENERAL GRAFIC INSCRIERE TRANSFORMER		ROTARY MACHINE OR SYSTEM WITH ROTARY MACHINE/MASINA ROTATIV SAU SISTEM CU MASINA ROTATIV G = GENERATOR/GENERATOR; M = MOTOR/MOTOARE; GS = SYNCHRONOUS GENERATOR/SINCRON GENERATOR; MS = SYNCHRONOUS MOTOR/MOTOR SINCRON; GE = GENERATING SET/GENERATOR
	TWO WINDING TRANSFORMER WITH SCREEN- ISOLATION TRANSFORMER/TRANSFORMATOR CU DOUĂ ÎNTOARCEREA MONITOR-TRANSFORMER DE IZOLARE		POWER CONVERTER SIGN GRAPHIC GENERAL/CONVERTOR DE PUTERE SEMNUL GRAFIC GENERALE
	CENTRAL WITH SOCKET TRANSFORMER ON A WINDING/transformator CU PRIZA CENTRALE PE O LICHIDAREA		RECTIFIER/RECTIFIER
	THREE-PHASE TRANSFORMER CONNECTIONS STAR TRIANGLE/TRIFAZAT TRANSFORMER CONEXIUNI STAR TRIANGLE		CURRENT CONVERTER IN ALTERNATING/CONVERTOR CURENT N ALTERNANTA (INVERTER)
	TRANSFORMER SECURITY/TRANSFORMATOR SECURITATE		STATIC SWITCH/STATICE SWITCH
	AUTOTRANSFORMER/AUTOTRANSFORMATOR		GATEWAY
△	THREE-PHASE TRIANGLE WINDING/LICHIDARE TREI FAZE UN TRIUNGHI	———	SERIAL NETWORK RS485/SERIAL REȚEA RS485
△	TRIANGLE OPEN PHASE WINDING/TRIANGLE OPEN PHASE WINDING OPEN	———	NETWORK OF LOGIC SELECTIVITY COMMUNICATION/REȚEAUA DE COMUNICARE SELECTIVITĂȚII LOGICĂ
	STAR PHASE WINDING/LICHIDARE TREI FAZE STEA	———	WIRING DEVICES FOR PROTECTION/CABLARE DISPOZITIVE DE PROTECȚIE
	THREE PHASE STAR WIND WITH NEUTRAL ACCESSIBLE BY EXTERNAL/LICHIDARE TREI FAZE STEA CU NEUTRU ACCES EXTERNE		
	THREE-PHASE WINDING AT ZIG-ZAG/LICHIDARE TREI FAZE ZIG-ZAG		

	CLOSING CONTACT (OPEN TO REPOSE)/CONTACT DE INCHIDERE (DESCHIS LA REPAUS)		CLOSING CONTACT SENSITIVE TO TEMPERATURE/CONTACT DE ÎNCHIDEREA SENSIBILE LA TEMPERATURA
	OPENING CONTACT (OPEN TO REPOSE)/CONTACT DE DESCHIDERE (DESCHIS LA REPAUS)		CLOSING CONTACT TO THERMIC RELAY/CONTACT DE ÎNCHIDERE DE RELEU TERMICE
	CONTACT EXCHANGE WITH MOMENTARY INTERRUPTION/DATE DE SCHIMB CU ÎNTRERUPERILOR MOMENTANE		THREE-WAY SWITCH/TREI-WAY SWITCH
	CONTACT A TWO-WAY THREE POSITIONS WITH CENTRAL POSITION OPENING/DATE DE A DOUA-WAY TREI POZIŢII, CU DESCHIDERE POZIŢIE CENTRALĂ		TWO-WAY SWITCH/DOUĂ-WAY SWITCH
	CLOSING CONTACT WITH MANUAL DRIVE/CONTACT DE INCHIDERE CU COMANDA MANUAL		TWO-WAY SWITCH AT THREE POSITIONS WITH CENTRAL POSITION OPENING/DOUĂ -WAY SWITCH TREI POZIŢII CU DESCHIDERE POZIŢIE CENTRALĂ
	CLOSING CONTACT WITH CONTROL BUTTON/CONTACT DE INCHIDERE CU BUTONUL DE CONTROL		CONTACT N.A.-N.C. TIMED TO ACTION/CONTACT N.A-N.C. CRONOMETRAT PENTRU A ACŢIUNE
	OPENING CONTACT WITH CONTROL BUTTON/CONTACT DE DESCHIDERE CU BUTONUL DE CONTROL		CONTACT N.A.-N.C. THE TIMED RELEASE/CONTACT N.A.-N.C.CRONOMETRAT PENTRU A ELIBERAREA
	CLOSING CONTACT WITH CONTROL ROD/CONTACT DE INCHIDERE CU COMANDA ROD		
	CLOSING CONTACT WITH ROTARY CONTROL/CONTACT DE INCHIDERE CU CONTROL ROTATIV		
	CLOSING POSITION CONTACT/POZIŢIA DE CONTACT DE INCHIDERE		
	OPENING POSITION CONTACT/POZIŢIA DE CONTACT DE DESCHIDERE (LIMIT/LIMITA)		
	EXCHANGE CONTACT WITHOUT INTERRUPTION/CONTACT DE SCHIMB FĂRĂ ÎNTRERUPERE		

COM	INTERFACE MODULE FOR CONNECTING A SYSTEM OF SUPERVISION/MODULUL DE INTERFATA PENTRU CONECTAREA UNUI SISTEM DE SUPRAVEGHERE		LOCK KEY/BLOCAREA CHEIE: WITH INDICATION FREE KEY–TOSWITCH–SWITCH OPEN–EXTRACT/CU EXPUNE LIBERTATEA CHEIE DE SWITCH– SWITCH DESCHIS–EXTRACTUL WITH INDICATION FREE KEY–TOSWITCH–SWITCH CLOSED/CU EXPUNE LIBERTATEA CHEIE DE SWITCH–SWITCH INSCHIS
M S A	INDICATION SWITCH TYPE/INDICAŢIE SWITCH TIP: (M) MODULAR/MODULARE (D) BOXED/BOXED (A) OPEN/DESCHIS		RINGED KEYS/CHEI INELAT
27G 27S	DIFFERENTIAL INDICATION OF TYPE AC (GENERAL OR SELECTIVE)/PRECIZAREA DIFERENTIAL DE TIPULUI AC (GENERALA SAU SELECTIV)		DEVICE OF OPERATION AND CONTROL OF REMOVABLE TYPE/DISPOZITIV DE FUNCŢIONAREA ŞI CONTROLUL DE TIP AMOVIBIL
27G 27S	DIFFERENTIAL INDICATION OF TYPE A (GENERAL OR SELECTIVE)/PRECIZAREA DIFERENTIAL DE TIPULUI A (GENERALA SAU SELECTIV)		MECHANICAL INTERLOCK BETWEEN DEVICES (UNLESS OTHERWISE INDICATED)/CONECTARE MECANICĂ ÎNTRE DISPOZITIVE (CU EXCEPŢIA CAZULUI NU ESTE INDICAT)
27G 27S	DIFFERENTIAL INDICATION OF TYPE B (GENERAL OR SELECTIVE)/PRECIZAREA DIFERENTIAL DE TIPULUI B (GENERALA SAU SELECTIV)		GROUNDING BARS SIGN WITHOUT POWER TO CLOSING/SEMNAL DE IMPAMANTAREA FĂRĂ PUTERE LA INCHIDE
	CONTROL COIL GENERAL SYMBOL/BOBINĂ DE CONTROL GENERAL SIMBOLUL	I I I x x x	AUXILIARY SWITCH SIGNALS LEGEND (X)/SWITCH AUXILIARE LEGENDA MESAJE (X): –I/O DEVICE CONNECTED/DISCONNECTED, A/C DEVICE OPEN/CLOSED; SR RELAY TRIPPED; M SOFT STATE –I /O DISPOZITIV CONECTAT/DECONECTAT, A/C DISPOZITIV ÎNCHIS/DESCHIS; SRRELAY DECLANŞAT; M STAT
X	CONTROL COIL (IE=OPENING COIL YO, YC=CLOSING COIL, YUO=COIL A POWER FAILURE)/BOBINĂ DE CONTROL(IE=BOBINĂ DESCHISE YO, YC=BOBINĂ INCHIDERE, YUO=BOBINĂ PANĂ DE CURENT)	X	LAMP (X = COLOR) FOR SWITCHES WITH MEANING OF COLORS: RED RD=(OPEN), GN=GREEN (CLOSED) YE=YELLOW (TRIP), BU=Blue (connected/disconnected), WH=WHITE (springs charged) ; OG=ORANGE LAMPĂ (X = COLOR) pentru switch–uri cu sensul de culori: ROŞU RD = (DESCHIS), GN = VERDE (ÎNCHIS) YE = GALBEN (TRIP), BU = Albastru (conectat / deconectat), WH = ALB (izvoare perceput) ; OG = ORANGE
	FREE RELEASE MECHANISM/MECANISMUL ELIBERAREA GRATUIT		FLASHING SIGNAL LAMP/LAMPĂ DE SEMNALIZARE INTERMITENT
M	MOTOR FOR CONTROL SWITCH/MOTOR PENTRU CONTROL SWITCH		CROSS LAMP SWITCH STATE SIGNAL/LAMPĂ CRUCEA SEMNAL DE STAT SWITCH
TX/RX FO/Cu	CONVERTER COPPER–FIBER OPTICS FOR SELECTIVITY LOGIC (TX TRANSMITTER, RECEIVER RX)/CONVERTOR CUPRU –FIBRA OPTICA PENTRU LOGICA SELECTIVITATEA (TX TRANSMITTER, RECEPTOR RX		

	SWITCH (POWER)/SWITCH (PUTERE)	X	RELAY OF MEASURING OR SIMILAR DEVICE WITH INDICATION OF SECURITY FEATURES ENABLED IN ANSI CODES/RELEU PENTRU DISPOZITIV DE MĂSURARE SAU SIMILARE CU INDICAŢIE DE CARACTERISTICI DE SECURITATE ESTE ACTIVAT ÎN CODURI ANSI
	SWITCH WITH BUILT-IN FUSE/SWITCH CU BUILT-IN FUSE		THERMAL RELAY/RELEU TERMIC
	POWER SWITCH FOR AUTOMATIC OPENING/BUTONUL DE PORNIRE DESCHIDEREA AUTOMATĂ		RELAY MAGNETIC/RELEU MAGNETIC
	POWER SWITCH OPENING AUTOMATIC, THERMIC/BUTONUL DE PORNIRE DESCHIDEREA AUTOMATĂ. TERMICE	Id	CURRENT DIFFERENTIAL RELAY/RELEU CURENT DIFERENTIAL
	POWER SWITCH OPENING AUTOMATIC, MAGNETOTHERMIC/BUTONUL DE PORNIRE DESCHIDEREA AUTOMATĂ. MAGNETOTERMICE	I >	OVERCURRENT RELAY (LONG DELAY)/RELEU SUPRACURENT (ÎNTÂRZIERII PRELUNGITE)
	POWER SWITCH FOR AUTOMATIC OPENING, DIFFERENTIAL MAGNETOTHERMIC/COMUTATORUL DE ALIMENTARE TIMP DESCHIDEREA AUTOMATĂ, DIFERENŢIAL MAGNETO TERMICE	I>>	OVERCURRENT RELAY (SHORT DELAY)/RELEU SUPRACURENT (SCURTĂ ÎNTÂRZIERE)
	POWER SWITCH FOR AUTOMATIC OPENING, WORKING FOR CURRENT DIFFERENTIAL/COMUTATORUL DE ALIMENTARE TIMP DESCHIDEREA AUTOMATĂ, LUCRU PENTRU DIFERENTIAL CURENT	I ⏚	EARTH FAULT RELAY/RELEU FAULT PĂMÂNTULUI
	POWER SWITCH AT AUTOMATIC OPENING WITH ADJUSTABLE THERMIC/COMUTATORUL DE ALIMENTARE TIMP DESCHIDEREA AUTOMATĂ CU CĂLDURĂ REGLABIL	U=0	RELAY GROUND FAULT RELAY A LACK OF POWER/RELEU ÎMPĂMÂNTARE RELEU LIPSĂ DE PUTERE
	POWER SWITCH AT AUTOMATIC OPENING REMOVABLE/COMUTATORUL DE ALIMENTARE TIMP DESCHIDEREA AUTOMATĂ AMOVIBIL	U<	RELAY UNDERVOLT/RELEU UNDERVOLT
		M D / SG/EL	PROTECTION TRIP UNITS ELECTRIC UNIT OF MEASURE (M) AND DIALOGUE (D)/ ÎMPIEDICAT DE UNITATI ELECTRICE CU UNITATEA DE MASURA (M) ŞI DIALOG (D)

	DISCONNECTOR/SEPARATOR		CONTACTOR (CLOSING CONTACT)/CONTACTOR (CONTACT DISCHIS)
	DISCONNECTOR WITH BUILT-IN FUSE/SEPARATOR CU BUILT-IN FUSE		CONTACTOR AUTOMATIC OPENING (ASSOCIATED TO A RELAY PROTECTION)/CONTACTOR AUTOMAT DESCHISE (CONEXE A RELEU DE PROTECŢIE)
	DISCONNECTOR TO MANUAL DRIVE WITH BLOCKING DEVICE/SEPARATOR LA MANUALĂ CU DISPOZITIV DE BLOCARE		CONTACTOR (OPENING CONTACT)/CONTACTOR (CONTACT INCHIS)
	TWO-WAY DISCONNECTOR THREE POSITIONS, WITH CENTRAL POSITION OPENING/DOUĂ -WAY SEPARATOR TREI POZIŢII, CU DESCHIDERE POZIŢIE CENTRALĂ		CONTACTOR AUTOMATIC OPENING WITH FUSE, WORKING FOR THERMAL EFFECT/CONTACTOR DESCHIDEREA AUTOMATĂ CU SIGURANŢĂ, LUCRU PENTRU EFECT TERMICĂ
	TWO-WAY DISCONNECTOR THREE POSITIONS, WITH CENTRAL POSITION OPENING/DOUĂ -WAY SEPARATOR TREI POZIŢII, CU DESCHIDERE POZIŢIE CENTRALĂ		
	SWITCH-DISCONNECTORS/ÎNTRERUPTOARE-SEPARATOARE		
	SWITCH-DISCONNECTORS WITH FUSE/ÎNTRERUPTOARE-SEPARATOARE CU FUSE		
	SWITCH-DISCONNECTORS WITH INTEGRATED FUSE/NTRERUPTOARE-SEPARATOARE CU SIGURANŢĂ INTEGRATĂ		
	SWITCH ROTARY DISCONNECTOR/SWITCH COMUTATOR ROTATIV		

	PHASE CONDUCTOR/CONDUCTOR FAZA		RESISTOR/RESISTOR
	NEUTRAL CONDUCTOR/NEUTRU CONDUCTOR		INDUCTORS, COILS, WINDING/INDUCTOARE, BOBINE, LICHIDAREA
	PROTECTION CONDUCTOR/CONDUCTOR DE PROTECŢIE		CAPACITOR GRAPHIC SIGN GENERAL/CAPACITOR GRAFIC GENERAL INSCRIERE
	NEUTRAL CONDUCTOR HAVING EVEN FUNCTION OF PROTECTION CONDUCTOR/CONDUCTORUL NEUTRU AVÂND CHIAR FUNCŢIA DE CONDUCTOR DE PROTECŢIE		GROUND SIGN GRAPHIC GENERAL/SOL INSCRIERE GRAFIC GENERALE
	CONNECTION OF CONDUCTORS/CONEXIUNE DE CONDUCTORI		MASS (FRAME)/MASA (FRAME)
	TERMINAL OR JACK/TERMINAL SAU CLAMP		LAND OF PROTECTION/TEREN DE PROTECŢIE
	EXAMPLE DERIVATION/DERIVATIE EXEMPLU		EQUIPOTENTIAL/ECHIPOTENŢIALĂ
	PIPELINE IN RAIL PROTECTED/CONDUCTE IN PROTEJATE BEAM		FUSE GENERAL SIGN/FUSE GENERALE INSCRIERE
	JUNCTION OF CONDUCTOR/JUNCTION DE CONDUCTOR		FUSE WITH STRIKER/FUSE CU PERCUTOR
	SOCKET PLUG (MALE AND FEMALE)/PRIZA (MASCULIN ŞI FEMININ)		FUSE With striker AND SEPARATE CIRCUIT SIGNAL/FUSE CU PERCUTOR ŞI SEMNALUL DE CIRCUIT SEPARAT
	TOROID FOR DIFFERENTIAL CIRCUIT–HOMOPOLAR/TOROID PENTRU UN CIRCUIT DE DIFERENTIAL–HOMOPOLARE		UNLOADER/DESCĂRCĂTOR