ELEVATIE A–A / A–A ELEVATION

Sc. 1:100

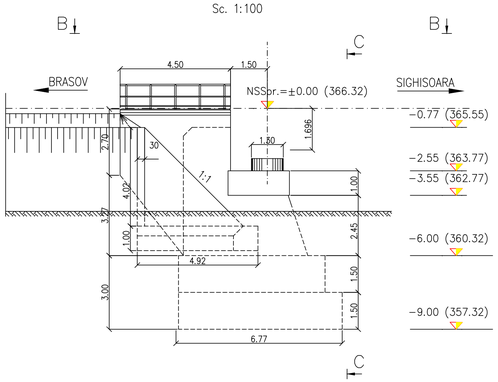

ELEVATIE D–D / D–D ELEVATION

Sc. 1:100

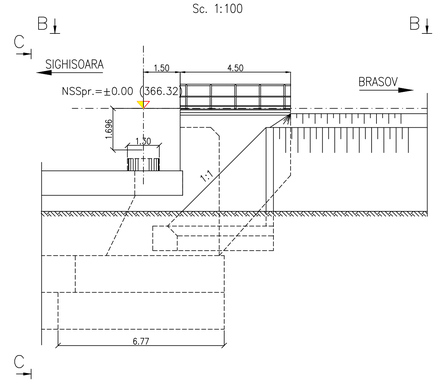

VEDERE C–C (Culeea Brasov)
C–C VIEW (Brasov abutment)

Sc 1:100

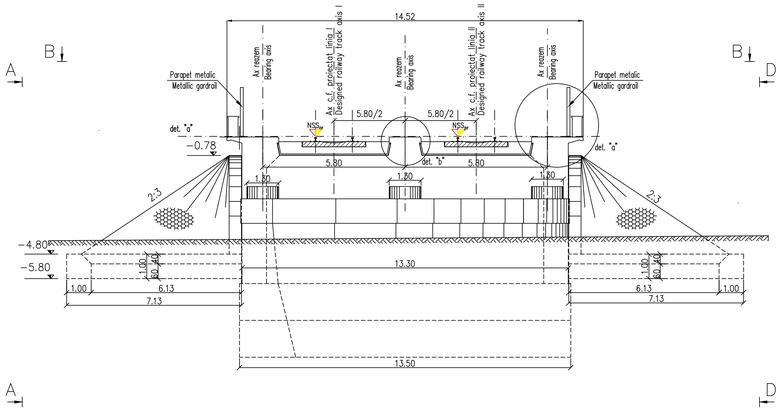

SECTIUNE E–E (Culeea Brasov)
E–E SECTION (Brasov abutment)

Sc 1:100

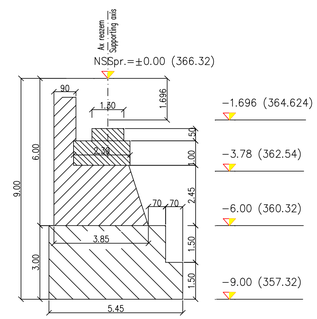

Detaliul/Detail "a"

Sc 1:50

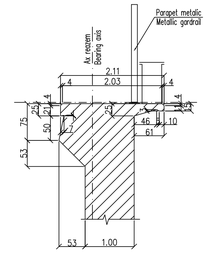

Detaliul/Detail "b"

Sc 1:50

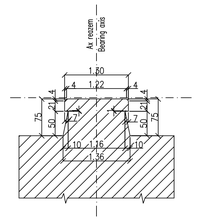

LEGENDA BETOANELOR/CONCRETE LIST

Beton armat în cuzineti si in bancheta cuzinetilor
Reinforced concrete in the cushionsh and cushions bench
C35/45–CEM I/A–S 52,5–(XC4+XF3+XA2)–A/C=0,50–D_{max}=16–Cl 0,20

Beton in fundatiile directe ale culeelor
Plain concrete in abutments foundations
C 25/30–Ciment H II/A 42,5–(XF3)–A/C=0,50–D_{max}=32–Cl 0,20

Beton armat in elevatiile culeelor
Plain concrete reincefortmen in abutments elevations
C 25/30–Ciment H II/A 42,5–(XC4+XF3)–A/C=0,50–D_{max}=32–Cl 0,20

Beton simplu in fundatii sferturilor de con
Simple concrete foundations sfert de con
C 25/30–CEM II/A–S 32,5–(XF1)–A/C=0,50–D_{max}=32–Cl 0,20

Beton de egalizare
Concrete leveling
C 25/30–CEM II/A–S 32,5–(XF3)–A/C=0,55–D_{max}=16–Cl 0,20

In cazul in care temperatura in timpul turnarii este scazuta, se vor folosi cimenturile cu rezistenta initiala mare, R si aditivi acceleratori, iar in cazul turnarii pe timp calduros, cimenturile cu rezistenta initiala uzuala, N si aditivi intarzietori (conf.NE 012/2–2010 si tabelului 2 din SR EN 197–1:2002)

When the temperature during the casting is low, cements with high initial resistance, R and accelerating additives shall be used and when it is cast during warm weather, cements with common initial resistance, N and delaying additives shall be used (according the norm NE 012/2–2010 and table 2 for the SR EN 197–1:2002).

ATENTIE/ATENTION

Aprovizionarea aparatelor de reazem se va face inaintea executarii cuzinetilor si a banchetei acestora. In cazul in care inaltimea aparatelor de reazem aprovizionate difera fata de cea considerata in proiect se vor modifica inaltimile pe reazem corespunzator cu noile aparate.

The bearing blocks shall be supplied before building the bearings and their seats. In case the height of the supplied bearing blocks differs from that given in the project, the heights on the seats shall be adjusted so as to comply with the new devices.

Detaliul/Detail 3

Sc 1:10

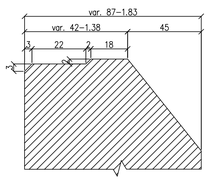

DETALIU–SISTEM DE DRENARE A APELOR DIN SPATELE CULEELOR

DETAIL–SYSTEM FOR DRAINAGE THE WATER FROM BEHIND THE ABUTMENTS

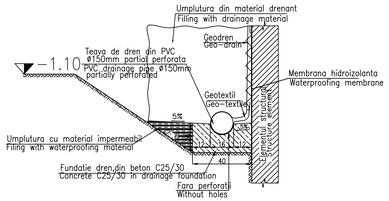

VEDERE B–B (Culeea Brasov)
B–B VIEW (Brasov abutment)

Sc 1:100

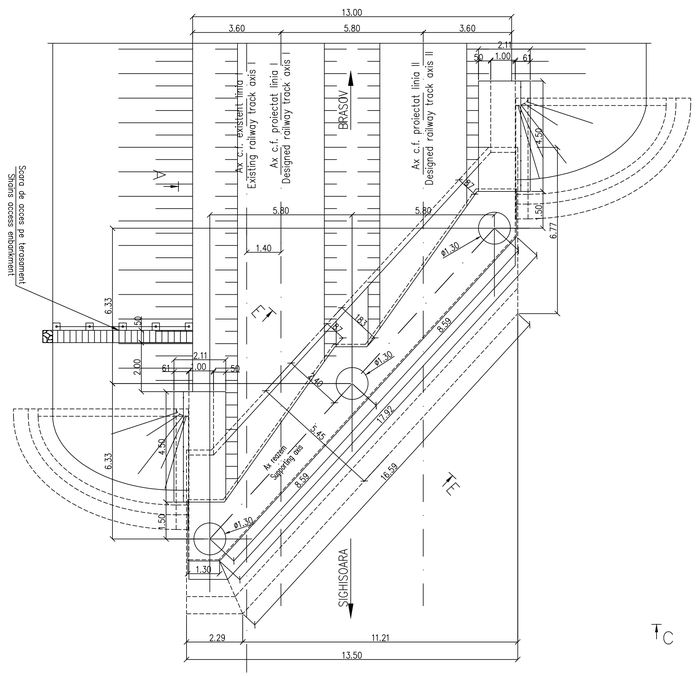

N O T A

1. Prezentul plan s–a intocmit pe baza urmatoarelor date:
   –plan de situatie;
   –dispozitie generala;
   –profil in lung;
   –profil transversal;
   –fisa podului;
   –calcul hidraulic;
   –date culese pe teren.
2. Podul corespunde la convoaiele de calcul UIC (LM71 si SW/2).
3. Noul pod are urmatoarea alcatuire:
   – suprastructura: tablier metalic cu cuva din beton, pentru cale dubla;
   – infrastructura: culei din beton armat, fundate direct.
4. Caile cuzinetilor si inaltimile pe reazem ale tablierelor se vor stabili numai dupa aprovizionarea aparatelor de reazem.
5. La executie se vor respecta cu strictete prevederile din "Normativ pentru producerea betonului si executarea lucrarilor din beton, beton armat si beton precomprimat. Partea 1: Producerea betonului", indicativ NE 012/1–2007 si "Normativ pentru producerea betonului si executarea lucrarilor din beton, beton armat si beton precomprimat. Partea 2: Executarea lucrarilor din beton", indicativ NE 012/2–2010, iar verificarea calitatii lucrarilor si receptionarea lor se va face conform normativului C56–1985.
   –La proiect sunt atasate instructiunile pentru urmarirea curenta a comportarii in timp si Programul privind controlul calitatii lucrarilor.
6. Daca la executie se vor constata neconcordante intre situatia existenta pe teren si cea din proiect se va anunta proiectantul.
7. Constructia se incadreaza in categoria de importanta B (constructii de importanta deosebita), modelul 1 de asigurare a calitatii si clasa de importanta B, conform HG 766/1997.
8. Proiectul va fi verificat la exigentele A4.2; B2.2; D2.2

N O T E

1. This plan has been drawn up based on the following data:
   –Lay–out Plan;
   –the general disposition;
   –Longitudinal Profile;
   –Cross–section Profile;
   –Bridge's File;
   –Hydraulic determination;
   –Field Data.
2. Bridge convoys calculation corresponds to UIC (LM71 and SW/2).
3. The new bridge has the following structure:
   – Superstructure: metallic deck with concrete box for double track;
   – Infrastructure: abutments and reinforced concrete, with direct foundation.
4. Shares bearing bushings and height on the decks will be established only after the supply of support equipment
5. The execution will strictly comply with the provisions of "Practice code for the concrete production and works execution, reinforced and pre–stressed concrete – Part 1: Practice code for concrete production" NE 012/1–2007 and "Practice code for the concrete production and works execution, reinforced and pre–stressed concrete – Part 2: The execution of concrete works." NE 012/2–2010, and the quality and the reception of the works shall be made accordingly to Norm C 56–1985.
6. In case during the execution there will be found out any discrepancies between the existing situation on site and in project, the designer will be anounced.
7. The construction has been classified in B category of importance (high important constructions), model 1 –ensuring the quality and class of importance B according to G.O. 766/97.
8. The project will be checked to comply with the requirements A4.2; B2.2; D2.2.

Se interzice copierea, difuzarea, imprumutarea sau utilizarea in alte scopuri, fara permisiunea Arex Lider Company ca proprietar al desenului.
This drawing is forbidden to be copied, lent or used in other purposes than those previously approved by Arex Lider Company as its owner.

Indice Index	Data Date	Modificare Modification/Revision	Proiectant Designer	Aprobat Consultant Approved Consultant	Aprobat CFR Approved CFR
D					
C					
B					
A	12.2011	Revizia 1 1 Revision	Carmen Balan		

GUVERNUL ROMANIEI
ROMANIAN GOVERNMENT

PROIECT FINANŢAT DE UNIUNEA EUROPEANĂ
EUROPEAN UNION FINANCED PROJECT

C.N.C.F. "C.F.R." - S.A.

CLIENT / CLIENT

ITALFERR GRUPPO FERROVIE DELLO STATO
Joint Venture leader
Scott Wilson
OBERMEYER PLANEN + BERATEN GmbH
TECNIC Consulting Engineers

CONSULTANT / CONSULTANT

			Data Date	Semnătură Signature
Aprobat Approved	Şef proiect Project manager	R. Liuzza		
Aprobat Approved	Coordonator Secţiune 1 Section 1 Coordinator	C. Gambelli		
Verificat Checked	Expert Cheie Checking Expert	V.Kallidromitis		

SUBCONTRACTANT / SUBCONTRACTOR

Aprobat Approved	Responsabil Subconsultant Subconsultant Responsible	A. Dinulescu Stanciu	12.2011	
Întocmit Elaborated	Proiectant Designer	Balan Carmen	12.2011	

Reabilitarea liniei de cale ferata Braşov - Simeria, parte componentă a coridorului IV Pan European, pentru circulaţia trenurilor cu viteza maximă de 160 km/h,
Tronsonul : Braşov - Sighişoara
Rehabilitation of the railway line Braşov - Simeria, component Part of the IV Pan-European Corridor, for the trains circulation with maximum speed of 160 km/h,
Section : Braşov - Sighişoara

Proiect/Project
2004/RO/16/P/PA/003

Faza / Phase:
P.Th. / T.D.

Denumire desen / Drawing Title : Interval Statia Albesti
POD km 277+798.279 -G.Z.C.J.C.B. D=38.00m
PLAN COFRAJ CULEEA BRASOV
BRIDGE km 277+798.279 D=38.00m
FORMWORK PLANE (BRASOV ABUTMENT)

Codificare / Codification System	Scara / Scale 1:100 1:50	LOT / LOT	Nr. / No 01 / 01
E A 5 1 0 1 E 1 9 B B P V 0 4 4 2 0 0 4 1			

594x1050