ANCORARE COMPLET COMPENSATA A CATENAREI
FULL COMPENSATED CATENARY ANCHORING

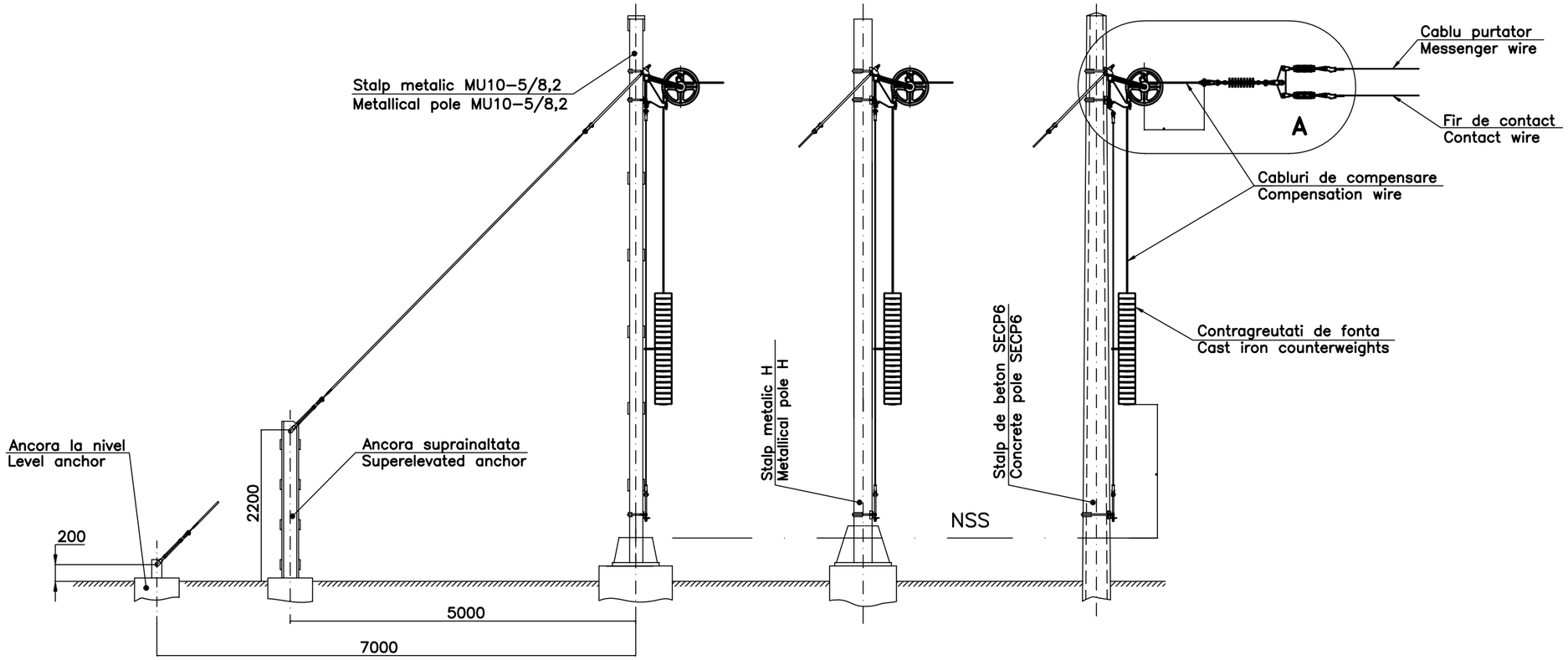

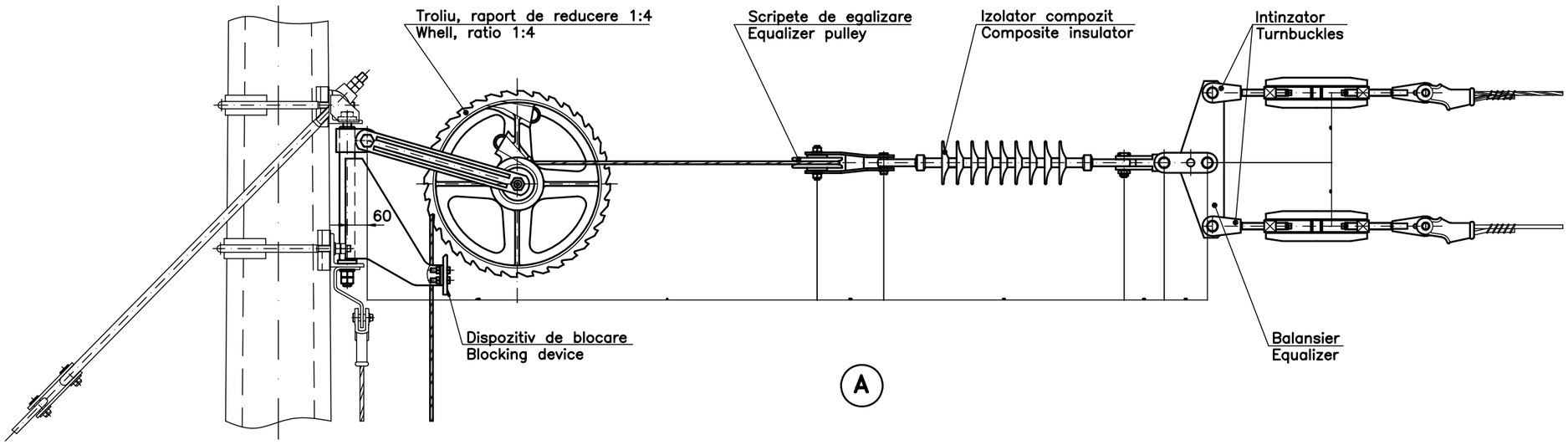

ANEXA 15
ANNEX 15