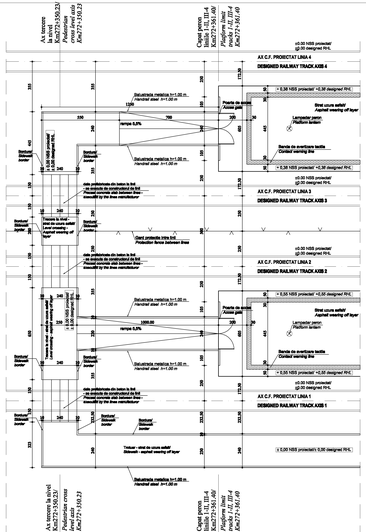

DETALIU 1 - PLAN sc 1:100/
DETAIL 1 - PLAN sc 1:100

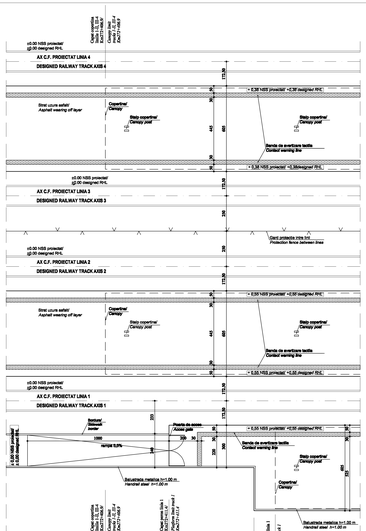

DETALIU 2 - PLAN sc 1:100/
DETAIL 2 - PLAN sc 1:100

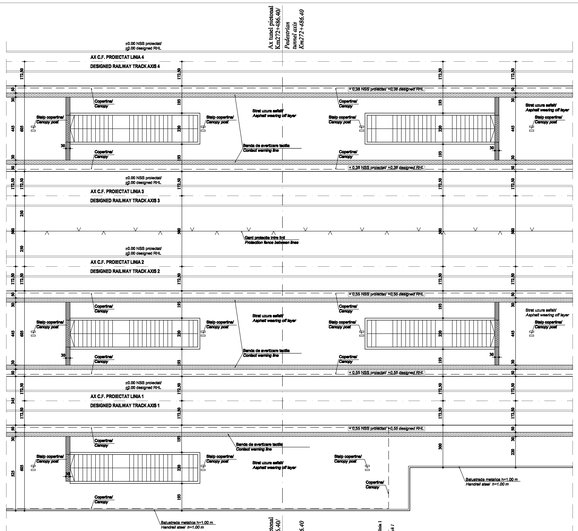

DETALIU 3 - PLAN sc 1:100/
DETAIL 3 - PLAN sc 1:100

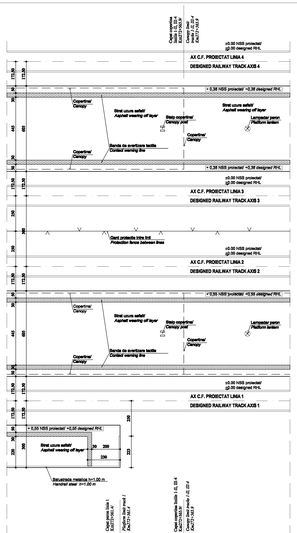

DETALIU 4 - PLAN sc 1:100/
DETAIL 4 - PLAN sc 1:100

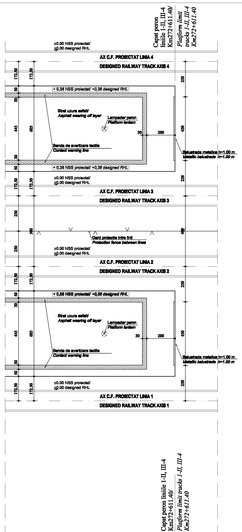

DETALIU 5 - PLAN sc 1:100/
DETAIL 5 - PLAN sc 1:100

DETALIU 5 - PLAN sc 1:100/
DETAIL 5 - PLAN sc 1:100

DETALIU 4 - PLAN sc 1:100/
DETAIL 4 - PLAN sc 1:100

DETALIU 3 - PLAN sc 1:100/
DETAIL 3 - PLAN sc 1:100

DETALIU 2 - PLAN sc 1:100/
DETAIL 2 - PLAN sc 1:100

DETALIU 1 - PLAN sc 1:100/
DETAIL 1 - PLAN sc 1:100

Indice / Index	Data / Date	Modificare / Modification/Revision	Proiectant / Designer	Aprobat Consultant / Approved Consultant	Aprobat CFR / Approved CFR
D					
C					
B					
A					

GUVERNUL ROMANIEI
ROMANIAN GOVERNMENT

PROIECT FINANTAT DE UNIUNEA EUROPEANA
EUROPEAN UNION FINANCED PROJECT

CLIENT / CLIENT

C.N.C.F. "C.F.R." - S.A.

ITALFERR Società di Ingegneria
Joint venture leader

Scott Wilson

OBERMEYER PLANEN + INPHAREN GmbH

TECNIC Consulting Engineers

CONSULTANT / CONSULTANT

			Data / Date	Semnătură / Signature
Aprobat / Approved	Şef proiect / Project manager	R. Liuzza	12.2011	
Aprobat / Approved	Director tehnic Verificator / Technical Director Verifier	C. Gambelli	12.2011	
Verificat / Checked	Verificator / Verifier	Giuseppe Fiorenzuoli	12.2011	

SUBCONTRACTANT / SUBCONTRACTOR

Aprobat / Approved	Responsabil Subconsultant / Subcontractor Responsible	A.Stanciu - Dinulescu	12.2011	
Elaborat / Elaborated	Proiectant / Designer	Stefania Gheorghe	12.2011	

Reabilitarea liniei de cale ferata Braşov - Simeria, parte componentă a coridorului IV Pan European, pentru circulaţie trenuri cu viteza maximă de 160 km/h, Transeptorul I Braşov - Bişkolgasza
Rehabilitation of the railway line Braşov - Simeria, component Part of the IV Pan-European Corridor, for the trains circulation with maximum speed of 160 km/h, Section I Braşov - Bişkolgasza

Proiect/Project
2004/RO/16/P/PA/020

Denumire desen / Drawing Title :

Detalii capete de peroane - Statia Vanatori /
Vanatori Station - Details for platforms extremities

Faza / Phase:
D.E. / E.D.

Codificare / Codification System

Scara / Scale	LOT/LOT	Nr./No. / Ind./Rev.
1:100		00 / 00

E A 5 1 0 1 E 1 7 B A C C 0 1 0 2 0 0 E 1