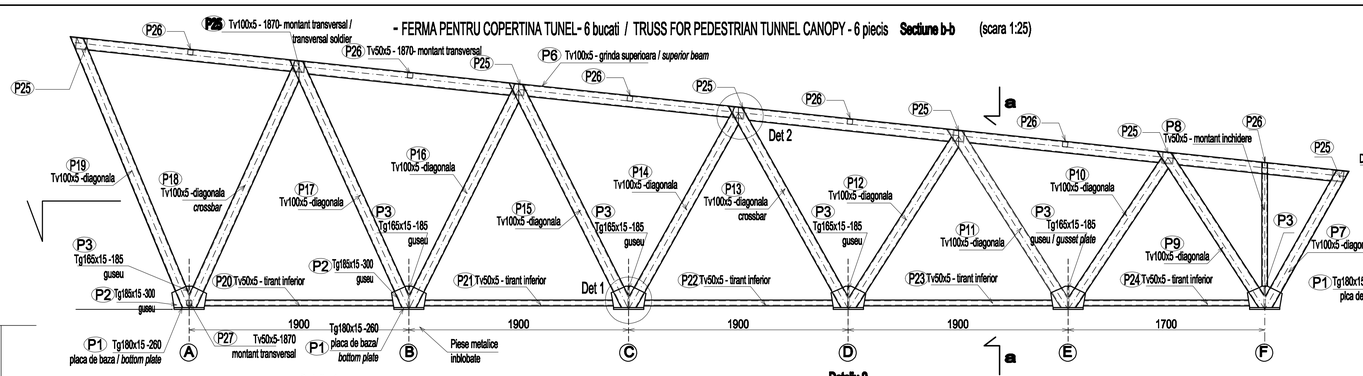

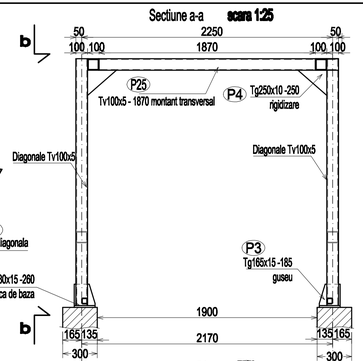

Otel/ *Steel* - OL 37-2 (S235JR)

Poz	Denumire	Grosime mm	Latime mm	Lung (mm)	Nr. buc	GREUTATE kg Unitara	Pe bucata	Total
COPERTINA TUNEL (pentru un acces)								
P1	placa Tb15x180	15	180	260	12	21.20	5.5	66.13
P2	placa Tb15x185	15	185	300	12	21.78	6.5	78.43
P3	placa Tb15x165	15	165	185	12	19.43	3.6	43.14
P4	placa Tb10x250	10	250	250	14	19.63	4.9	68.69
P5	placa Tb8x86	8	86	102	14	5.40	0.6	7.72
P6	Tv 100x5			11119	2	14.70	163.4	326.90
P7	Tv 100x5			1211	2	14.70	17.8	35.61
P8	Tv 50x5			973	2	6.85	6.7	13.34
P9	Tv 100x5			1639	2	14.70	24.1	48.19
P10	Tv 100x5			1521	2	14.70	22.4	44.72
P11	Tv 100x5			1866	2	14.70	27.4	54.87
P12	Tv 100x5			1721	2	14.70	25.3	50.60
P13	Tv 100x5			2027	2	14.70	29.8	59.60
P14	Tv 100x5			1902	2	14.70	28.0	55.92
P15	Tv 100x5			2199	2	14.70	32.3	64.66
P16	Tv 100x5			2082	2	14.70	30.6	61.22
P17	Tv 100x5			2375	2	14.70	34.9	69.83
P18	Tv 100x5			2266	2	14.70	33.3	66.63
P19	Tv 100x5			2556	2	14.70	37.6	75.15
P20	Tv 100x5			1763	2	14.70	25.9	51.84
P21	Tv 100x5			1758	2	14.70	25.8	51.69
P22	Tv 100x5			1752	2	14.70	25.8	51.51
P23	Tv 100x5			1748	2	14.70	25.7	51.40
P24	Tv 100x5			1557	2	14.70	22.9	45.78
P25	Tv 100x5			1870	7	14.70	27.5	192.43
P26	Tv 50x5			1870	6	6.85	12.8	76.86
P27	Tv 50x5			1870	1	6.85	12.8	12.81
							Total Kg	1825.67
							Electozi 3%	54.77
						Total general pentru o fundatie Kg		1881
						Total general fundatii copertina (3 bucati) Kg		5643

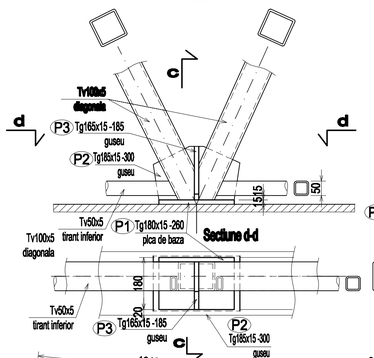

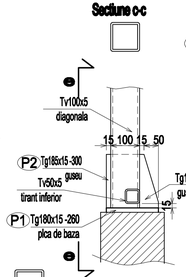

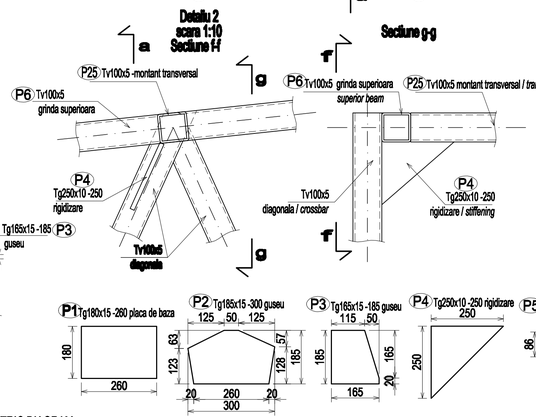

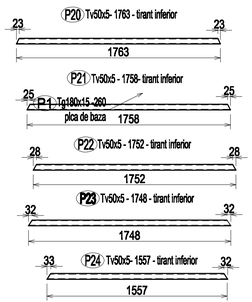

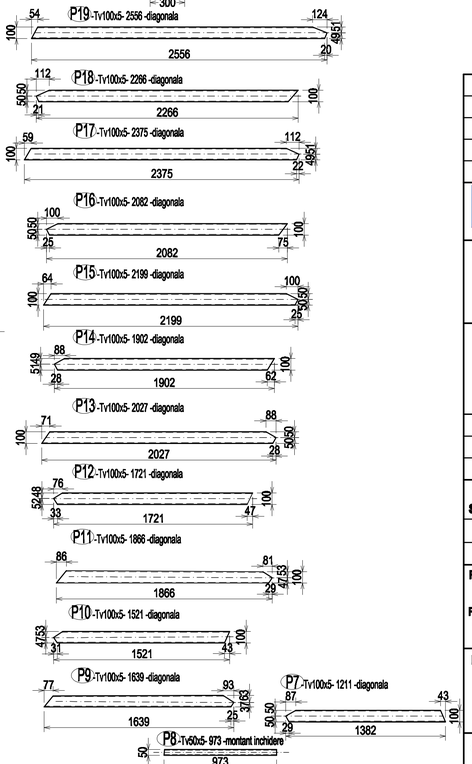

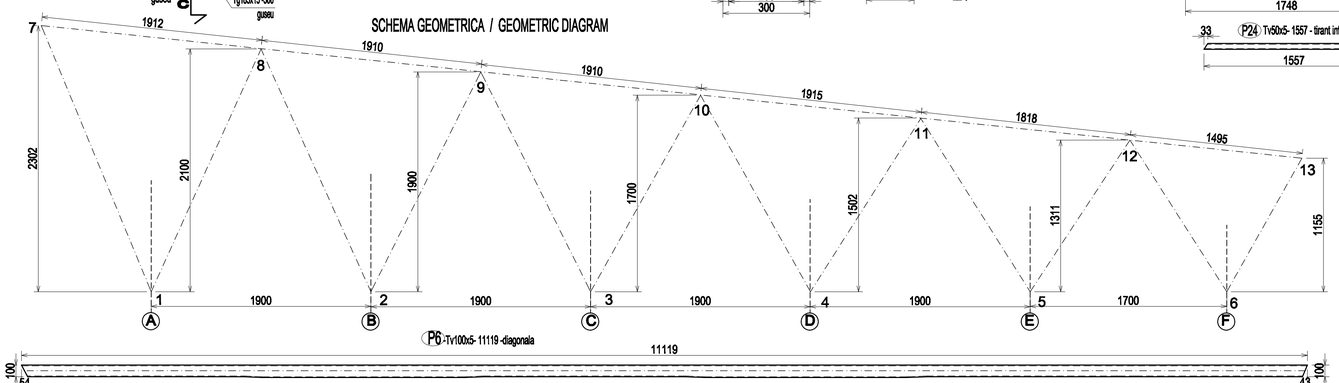

D					
C					
B					
A					
Indice Index	Data Date	Modificare Modification/Revision	Proiectant Designer	Aprobat Consultant Approved Consultant	Aprobat CFR Approved CFR

GUVERNUL ROMANIEI
ROMANIAN GOVERNMENT

PROIECT FINANTAT DE UNIUNEA EUROPEANĂ
EUROPEAN UNION FINANCED PROJECT

CLIENT / CLIENT

C.N.C.F. "C.F.R." - S.A.

ITALFERR GRUPPO FERROVIE DELLO STATO *Joint Venture leader* — Scott Wilson — OBERMEYER PLANEN + BERATEN GmbH — TECNIC Consulting Engineers

CONSULTANT / CONSULTANT

			Data Date	Semnituri Signature
Aprobat Approved	Şef proiect Project manager	R. Liuzza	12.2011	
Aprobat Approved	Coordonator Secţiune 1 Section 1 Coordinator	C. Gambelli	12.2011	
Verificat Checked	Verificator Checking	Giuseppe Fioravanti	12.2011	

SUBCONTRACTANT / SUBCONTRACTOR AREX PROIECT

Aprobat Approved	Responsabil Subconsultant Subconsultant Responsible	A.Stanciu - Dinulescu	12.2011	
Întocmit Elaborated	Proiectant Designer	Anca Rus	12.2011	

Reabilitarea liniei de cale ferata Braşov - Simeria, parte componentă a coridorului IV Pan European, pentru circulaţia trenurilor cu viteza maximă de 160 km/h,
Tronsonul : Braşov - Sighişoara
Rehabilitation of the railway line Braşov - Simeria, component Part of the IV Pan-European Corridor, for the trains circulation with maximum speed of 160 km/h,
Section : Braşov - Sighişoara

Proiect/Project 2004/RO/16/P/PA/003

Faza / Phase: P.Th. / T.D.

Denumire desen / Drawing Title :

HALTA C.F. ROTBAV / ROTBAV FLAG STATION
COPERTINA TUNEL PIETONAL / PEDESTRIAN TUNNEL CANOPY
- PLAN DEBITARE FERMA / TRUSS CUTING PLAN -

Codificare / Codification System	Scara / Scale 1:25 1:10	LOT / LOT	Nr. / No 01 / 01
E A 5 1 0 1 C 0 8 P Z C C 0 0 1 4 0 0 8 0			