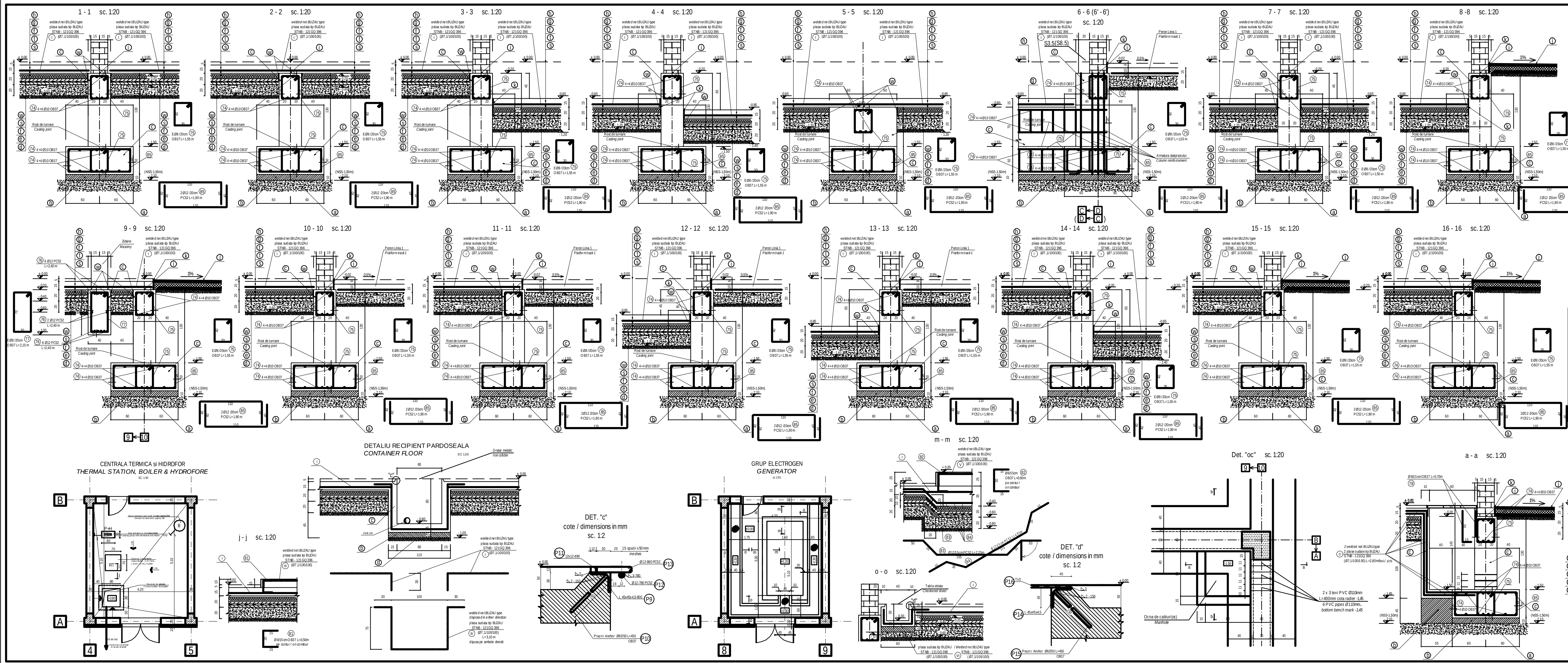

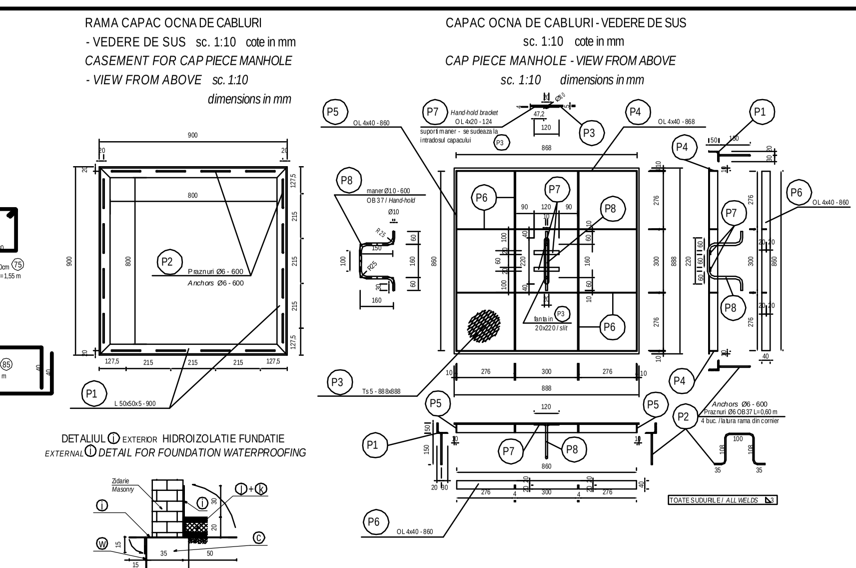

EXTRAS DE LAMINATE CAPAC CU RAMA - OCNA DE CABLURI - 1 buc.
BILL OF ROLLED SECTIONS - CASEMENT AND CAP PIECE MANHOLE - 1 pcs.

OTEL / STEEL S235J2G3 (OL37.2n) Electrozi / Electrodes : Superbaz E.42.B

Poz. Mark	Denumirea Denomination	Sectiunea Section (mm)	Lungimea Length (mm)	Bucăti No. pcs.	Greutate / Weight (kg) /ml	/ buc	TOTAL
P1	Rama cornier / *Casement*	L 50x50x5	900	4	3.770	3.40	13.60
P2	Praznuri rama / *Anchors*	Ø6 OB37	600	16	0.222	0.14	2.20
P3	Capac tabla striata / *Cap piece*	gros. Ts 5 ; supr. 888 x 888 mm		1	43/m²	33.91	33.91
P4	Rigidizare capac / *Bracing rib*	OL 4x40	868	2	1.256	1.09	2.18
P5	Rigidizare capac / *Bracing rib*	OL 4x40	860	2	1.256	1.08	2.16
P6	Coaste capac / *Bracing rib*	OL 4x40	860	4	1.256	1.08	4.33
P7	Suporti maner / *Hand-hold bracket*	OL 4x20	124	2	0.628	0.08	0.16
P8	Maner capac / *Hand-hold*	Ø10 OB37	600	1	0.617	0.37	0.37
P9	Rama cornier / *Casement*	L 45x45x4,5	890	4	3.060	2.73	10.92
P10	Praznuri rama / *Anchors*	Ø6 OB37	450	16	0.222	0.10	1.60
P11	Otel patrat / *Square iron*	12x12	890	4	1.131	1.01	4.04
P12	Otel beton / *Cribble*	Ø 12 PC52	780	16	0.888	0.70	11.20
P13	Otel beton / *Cribble*	Ø 12 PC52	860	16	0.888	0.77	12.32
P14	Rama cornier / *Casement*	L 45x45x4,5	26,48m		3.060		81.03
P15	Praznuri rama / *Anchors*	Ø6 OB37	450	75	0.222	0.10	7.50
P16	Capac tabla striata / *Checkered sheet*	gros. Ts 5 ; supr. 0.49m x 12,9m			43/m²		271.81
	TOTAL LAMINATE					(kg)	360.34
	ELECTROZI + GRUND ~3,5%					(kg)	12.66
	TOTAL Kg.					(kg)	373
	Din care, capacul propriu zis / only cap piece :						~44,5 kg

PLASE SUDATE TIP BUZAU **121GQ396 STNB** (Ø7,1/100/100)
WELDED NETS BUZAU TYPE **121GQ396 STNB** (Ø7,1/100/100)
"I" : 475,00m² x 6,22kg/m² x (2,0/1,7) x (6,0/5,7) = **3660,00 kg**
"II" : 11,20m² x 6,22kg/m² .... = **70,00 kg**
"III" : 1,45m² x 6,22kg/m² .... = **9,00 kg**
"IV" : 6,20m² x 6,22kg/m² .... = **38,50 kg**
"V" : 7,30m² x 6,22kg/m² .... = **45,50 kg**
"VI" : 18,50m² x 6,22kg/m² x (6,0/5,7) .... = **121,00 kg**
TOTAL = **3944,00 kg**

±0.00 = +0.60 NSS

NOTA 1 :
Pentru toate armaturile, raza dornului de indoire va fi egala cu **3d**
NOTE 1 :
For all reinforcements, the radius of mandrel for bending is equal to ***3d***

Cotarea armarii in "cm" ;
Cotarea confectiilor metalice in "mm"
Reinforcement dimensions in "cm" ;
Dimensions of metallic elements in "mm"

BETON SIMPLU, vibrat (egalizare) :
C8/10 – P4 – T3 – IIA 32,5/ 0...31
BETON ARMAT, vibrat (fundatii) :
C12/15 – P4 – T3 – IIA 32,5/ 0...31
BETON ARMAT, vibrat (strat suport pardoseala) :
C16/20 – P4 – T3 – IIA 32,5/ 0...16
OTEL BETON : OB37 ; PC52 ; STNB
LAMINATE : S235J2G3 (OL37)
PLAIN CONCRETE, vibrated (leveling) :
C8/10 – P4 – T3 – IIA 32,5/ 0...31
REINFORCED CONCRETE, vibrated (foundations) :
C12/15 – P4 – T3 – IIA 32,5/ 0...31
REINFORCED CONCRETE, vibrated (support layer of floor) :
C16/20 – P4 – T3 – IIA 32,5/ 0...16
REINFORCEMENT : OB37 ; PC52 ; STNB
ROLLED STEEL : S235J2G3 (OL37)
Acoperirea cu beton a armaturilor de rezistenta : c = 5 cm.
Concrete covering of the main reinforcing bars : c = 5 cm.

DETALIU INTRERUPERE ARMATURI
DETAIL FOR REINFORCEMENT INTERRUPTION

bare "sus" - (de la partea superioara a unei centuri) / *"up" bars - (at the upper part of the girdle)*
bare "jos" - (de la partea inferioara a unei centuri) / *"down" bars - (at the lower part of the girdle)*
80 80 80

DETALIU COLTARE PT. PETRECERE ARMATURI
ELBOW PIECE DETAIL FOR REINFORCEMENT OVERLAPPING

(79) Armaturi Ø10 OB37 sus si jos L = 1,60 m, la colturile si intersectiile centurilor din soclurile fundatiilor. — *Reinforcement Ø10 OB37 up and down L = 1,60 m, at the corners and intersections of the girdles in the foundations sockets.*
(80) Armaturi Ø10 OB37 sus si jos L = 3,20 m, la colturile si intersectiile centurilor din talpile fundatiilor. — *Reinforcement Ø10 OB37 up and down L = 3,20 m, at the corners and intersections of the girdles in the foundations sills.*

NOTA 2 :
Armaturile longitudinale Ø10 OB37 din centurile fundatiilor se prevad fara ciocuri.
La colturi si intersectii, fiecare bara de pe o directie se va petrece cu cate o bara de pe cealalta directie, prin intermediul coltarelor (79) sau (80)
Petrecerea intermediara a barelor se va face prin suprapunere pe 80 cm, decalate "sus"/"jos" ca in figura. S-a considerat folosirea pe cat posibil integrala a barelor de 12,0 m lungime.
Suprapunerea plaselor sudate pe ambele directii se va face minim 3 ochiuri (30 cm).
Dimensiunile plasei sudate avute in vedere este l x L = 2,00 m x 6,00 m.

NOTE 2 :
The longitudinal reinforcements Ø10 OB37 of the foundation girdles are provided without hooks.
At the corners and intersections, each bar on one direction will be overlapped with one bar on the other direction, by some elbow pieces (79) or (80)
The intermediary overlapping of bars will be made by simple joining along 80 cm, staggered "up"/"down", as if in drawing. It was considered to use the total bar length of 12,0 m as much as possible.
The weded nets will be overlapped on both directions on minimum 3 meshes (30 cm).
The dimensions of welded net were considered to be l x L = 2,00 m x 6,00 m.

LEGENDA	*LEGEND*
(a) Perna de balast compactata 98%	*(a) 98% compacted ballastbed*
(b) Beton de egalizare C8/10	*(b) C8/10 leveling concrete*
(c) Beton armat in fundatii C12/15	*(c) Reinforced concrete in foundations C12/15*
(d) Umplutura de pamant sanatos compactat 98% in straturi de 10cm	*(d) 98% compacted proper ground filling in 10cm layers*
(e) Strat de rupere a capilaritatii din pietris compactat	*(e) Capillarity breaking layer made of compacted gravel*
(f) Hartie Kraft sau folie de polietilena	*(f) Kraft paper or polyethylene film*
(g) Strat suport al pardoselii din beton C16/20 armat cu plase sudate	*(g) Suport layer of concrete floor C16/20 reinforced with welded nets*
(h) Pardoseala finita	*(h) Finite floor*
(i) Membrana hidroizolanta rugoasa	*(i) Rough waterproof membrane*
(j) Trotuar 10cm, pe strat nisip 5cm si strat de uzura (asfalt) 5cm	*(j) 10cm sidewalk, on 5cm sand layer and 5cm hard covering (asphalt)*
(k) Dop mastic bituminos 2cm	*(k) 2cm bituminous mastic plug*
(w) Hidroizolatie - 2 membrane 2cm	*(w) 2 Waterproofing membranes - 2cm*
(t) Termoizolatie polistiren 10cm	*(t) Polystyrene insulation - 10cm*
(s) Sapa mortar 4cm	*(s) 4cm mortar layer*

[illegible]

Indice Index	Data Date	Modificare Modification/Revision	Proiectant Designer	Aprobat Consultant Approved Consultant	Aprobat CFR Approved CFR
D					
C					
B					
A					

GUVERNUL ROMANIEI / ROMANIAN GOVERNMENT — PROIECT FINANȚAT DE UNIUNEA EUROPEANĂ / EUROPEAN UNION FINANCED PROJECT

CLIENT / CLIENT — C.N.C.F. "C.F.R." - S.A.

ITALFERR — Joint Venture leader; OBERMEYER PLANEN + BERATEN GmbH; TECNIC Consulting Engineers

CONSULTANT / CONSULTANT

			Data Date	Semnătură Signature
Aprobat Approved	Șef proiect Project manager	R. Liuzza	12.2011	
Aprobat Approved	Coordonator Secțiune 1 Section 1 Coordinator	C. Gambelli	12.2011	
Verificat Checked	Verificator Verifier	Giuseppe Fioravanti	12.2011	

SUBCONTRACTANT / SUBCONTRACTOR

Aprobat Approved	Responsabil Subconsultant Subconsultant Responsible	A.Stanciu - Dinulescu	12.2011	
Întocmit Elaborated	Proiectant Designer	Popescu Remus Dan	12.2011	

Reabilitarea liniei de cale ferata Braşov - Simeria, parte componentă a coridorului IV Pan European, pentru circulația trenurilor cu viteza maximă de 160 km/h ,
Tronsonul : Braşov - Sighişoara
Rehabilitation of the railway line Braşov - Simeria, component Part of the IV Pan-European Corridor, for the trains circulation with maximum speed of 160 km/h,
Section : Braşov - Sighişoara

Proiect/Project 2004/RO/16/P/PA/003
Faza / Phase: D.E. / E.D.

Denumire desen / Drawing Title :
CLADIREA STATIEI VANATORI - SECTIUNI FUNDATII SI ALTE DETALII
VANATORI RAILWAY STATION BUILDING - FOUNDATIONS SECTIONS AND OTHER DETAILS

Codificare / Codification System: EA51 01 E 17 BC CC 00 8 1 022 2
Scara / Scale 1 : 20 — LOT / LOT — Nr. / No 01 / 01

5A2 (2100x594)=1,25m²

PDF created with pdfFactory Pro trial version www.pdffactory.com