Sectiune caracteristica peron km281+881.67 - km281+952.055
Characteristic platform cross section past the canopy km281+881.67 - km281+952.055

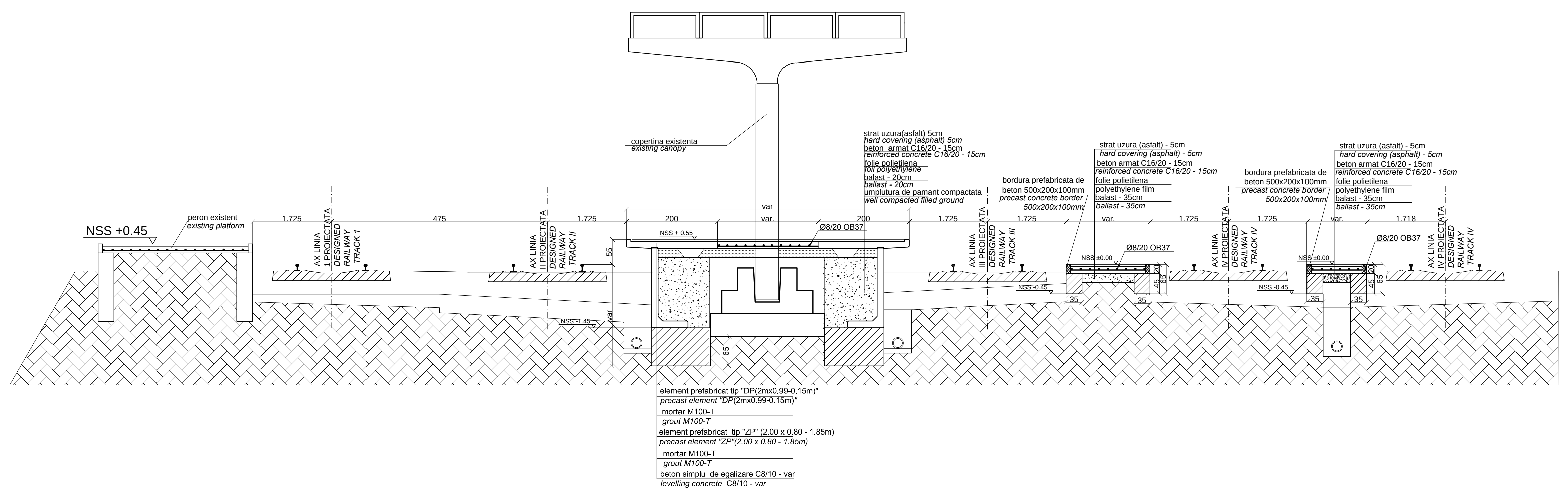
copertina existenta
existing canopy
peron existent
existing platform
NSS +0.45
1.725
475
200
var.
200
1.725
1.725
1.725
1.725
1.718
AX LINIA 1 PROIECTATA DESIGNED RAILWAY TRACK 1
AX LINIA II PROIECTATA DESIGNED RAILWAY TRACK II
AX LINIA III PROIECTATA DESIGNED RAILWAY TRACK III
AX LINIA IV PROIECTATA DESIGNED RAILWAY TRACK IV
NSS + 0.55
NSS -1.45
NSS -0.45
NSS ±0.00
Ø8/20 OB37
55
65
35
45
20
strat uzura(asfalt) 5cm
hard covering (asphalt) 5cm
beton armat C16/20 - 15cm
reinforced concrete C16/20 - 15cm
folie polietilena
foil polyethylene
balast - 20cm
ballast - 20cm
umplutura de pamant compactata
well compacted filled ground
bordura prefabricata de beton 500x200x100mm
precast concrete border 500x200x100mm
strat uzura (asfalt) - 5cm
hard covering (asphalt) - 5cm
beton armat C16/20 - 15cm
reinforced concrete C16/20 - 15cm
folie polietilena
polyethylene film
balast - 35cm
ballast - 35cm
element prefabricat tip "DP(2mx0.99-0.15m)"
precast element "DP(2mx0.99-0.15m)"
mortar M100-T
grout M100-T
element prefabricat tip "ZP" (2.00 x 0.80 - 1.85m)
precast element "ZP"(2.00 x 0.80 - 1.85m)
mortar M100-T
grout M100-T
beton simplu de egalizare C8/10 - var
levelling concrete C8/10 - var

Sectiune caracteristica peron km281+952.052 - km282+031.07
Characteristic platform cross section past the canopy km281+952.052 - km282+031.07

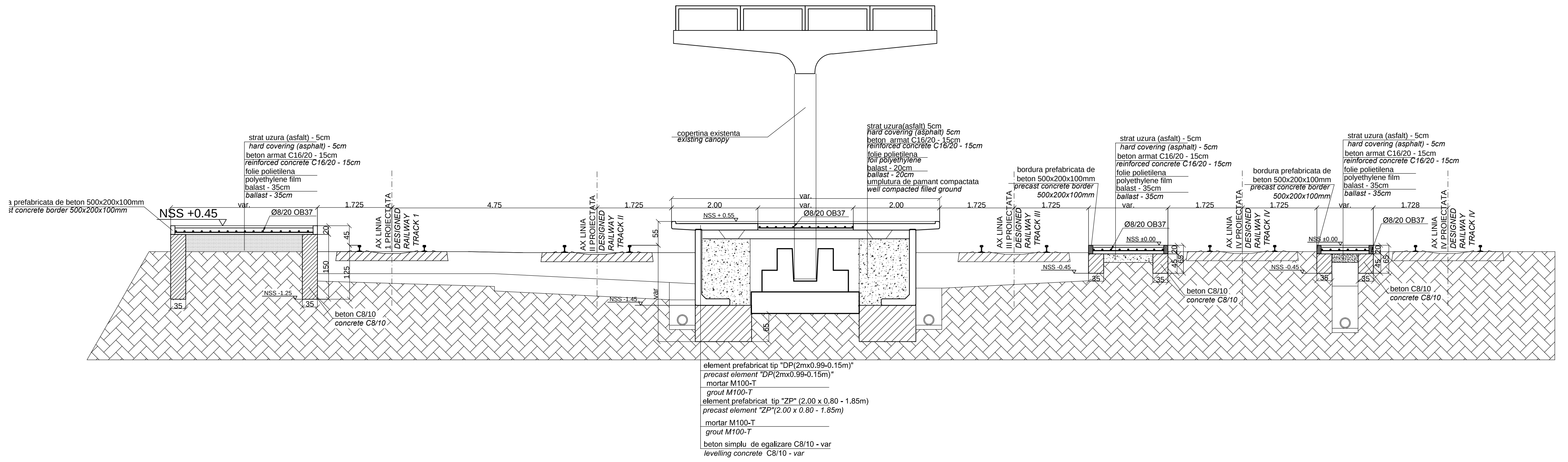
copertina existenta
existing canopy
bordura prefabricata de beton 500x200x100mm
precast concrete border 500x200x100mm
NSS +0.45
strat uzura (asfalt) - 5cm
hard covering (asphalt) - 5cm
beton armat C16/20 - 15cm
reinforced concrete C16/20 - 15cm
folie polietilena
polyethylene film
balast - 35cm
ballast - 35cm
var.
1.725
4.75
2.00
var.
2.00
1.725
1.725
1.725
1.725
1.728
Ø8/20 OB37
20
45
150
125
55
35
65
NSS + 0.55
NSS -1.25
NSS -1.45
NSS -0.45
NSS ±0.00
AX LINIA 1 PROIECTATA DESIGNED RAILWAY TRACK 1
AX LINIA II PROIECTATA DESIGNED RAILWAY TRACK II
AX LINIA III PROIECTATA DESIGNED RAILWAY TRACK III
AX LINIA IV PROIECTATA DESIGNED RAILWAY TRACK IV
beton C8/10
concrete C8/10
strat uzura(asfalt) 5cm
hard covering (asphalt) 5cm
beton armat C16/20 - 15cm
reinforced concrete C16/20 - 15cm
folie polietilena
foil polyethylene
balast - 20cm
ballast - 20cm
umplutura de pamant compactata
well compacted filled ground
bordura prefabricata de beton 500x200x100mm
precast concrete border 500x200x100mm
element prefabricat tip "DP(2mx0.99-0.15m)"
precast element "DP(2mx0.99-0.15m)"
mortar M100-T
grout M100-T
element prefabricat tip "ZP" (2.00 x 0.80 - 1.85m)
precast element "ZP"(2.00 x 0.80 - 1.85m)
mortar M100-T
grout M100-T
beton simplu de egalizare C8/10 - var
levelling concrete C8/10 - var

Sectiune caracteristica peron km281+772.95 - km281+873 si km282+031.07-km282+145.95
Characteristic platform cross section past the canopy km281+772.95 - km281+873 si km282+031.07-km282+145.95

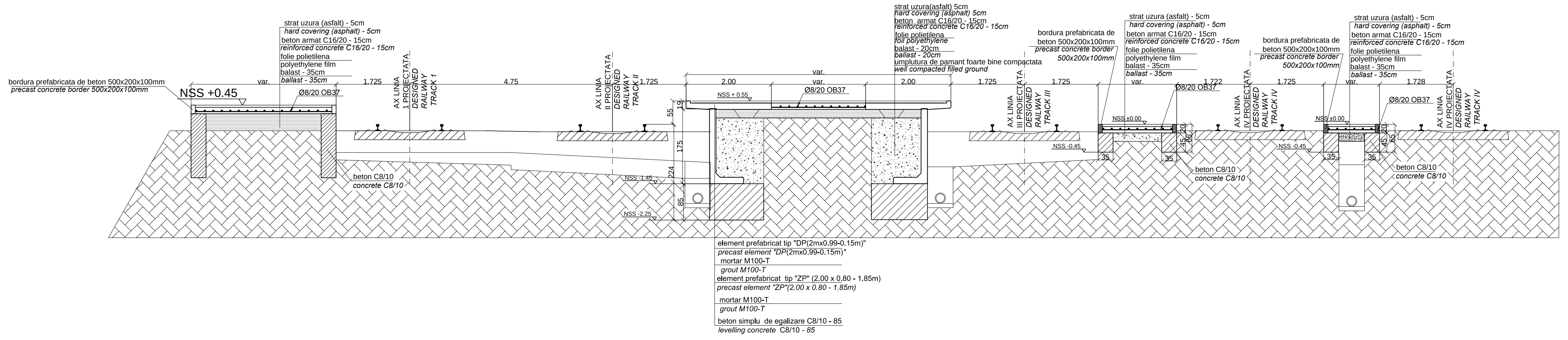
bordura prefabricata de beton 500x200x100mm
precast concrete border 500x200x100mm
NSS +0.45
strat uzura (asfalt) - 5cm
hard covering (asphalt) - 5cm
beton armat C16/20 - 15cm
reinforced concrete C16/20 - 15cm
folie polietilena
polyethylene film
balast - 35cm
ballast - 35cm
var.
1.725
4.75
2.00
var.
2.00
1.725
1.725
1.722
1.725
1.728
Ø8/20 OB37
19
55
175
224
85
35
NSS + 0.55
NSS -1.45
NSS -2.25
NSS -0.45
NSS ±0.00
AX LINIA 1 PROIECTATA DESIGNED RAILWAY TRACK 1
AX LINIA II PROIECTATA DESIGNED RAILWAY TRACK II
AX LINIA III PROIECTATA DESIGNED RAILWAY TRACK III
AX LINIA IV PROIECTATA DESIGNED RAILWAY TRACK IV
beton C8/10
concrete C8/10
strat uzura(asfalt) 5cm
hard covering (asphalt) 5cm
beton armat C16/20 - 15cm
reinforced concrete C16/20 - 15cm
folie polietilena
foil polyethylene
balast - 20cm
ballast - 20cm
umplutura de pamant foarte bine compactata
well compacted filled ground
bordura prefabricata de beton 500x200x100mm
precast concrete border 500x200x100mm
element prefabricat tip "DP(2mx0.99-0.15m)"
precast element "DP(2mx0.99-0.15m)"
mortar M100-T
grout M100-T
element prefabricat tip "ZP" (2.00 x 0.80 - 1.85m)
precast element "ZP"(2.00 x 0.80 - 1.85m)
mortar M100-T
grout M100-T
beton simplu de egalizare C8/10 - 85
levelling concrete C8/10 - 85

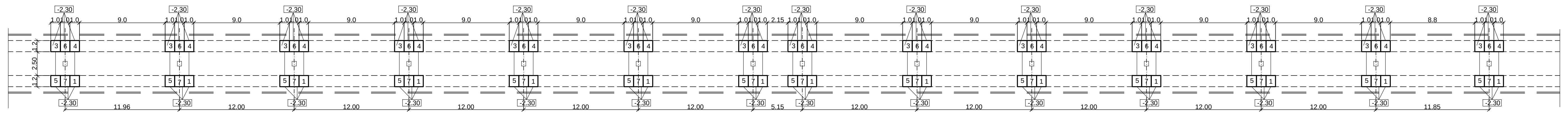
-2.30
1.0 1.0 1.0
9.0
2.15
8.8
3 6 4
5 7 1
1.2
2.50
1.2
11.96
12.00
5.15
11.85

Executia ***Peroanelor*** se face astfel :

PERONUL I :

La capetele peronului se vor demonta prefabricatele si se va decoperta stratul de uzura existent

– se executa sapatura in transee longitudinala, cu sprijiniri, conform sectiunilor indicate ;dupa compactarea fundului sapaturii cu ajutorul udarii;

– se traseaza fata de axul c.f. pozitia elementelor verticale ;

– se pozitioneaza si se realizeaza camerele de tragere cabluri, fundatiile stalpilor de iluminat, ale lampadarelor, retelele de instalatii, etc. ;

– se completeaza balastul pana la nivelul din proiect, se compacteaza, se asterne folia de polietilena ;

– se realizeaza rampele de acces de la capetele peroanelor, conform planului de ansamblu al peroanelor.

In dreptul cladirii de calatori se va reabilita prin aducerea la gabaritul c.f. de 1.725 din axul liniei 1.

PERONUL DINTRE LINIILE II SI III:

Pe marginea peronului se vor demonta dalele prefabricatele si se va decoperta stratul de uzura de pe peron existent.

– se executa sapatura in santuri cu sprijiniri, in latime de 1.30m si la o distanta de axul c.f. de 2.275mconform sectiunilor indicate, respectand gabaritul c.f. ;

- se traseaza fata de axul c.f. pozitia elementelor verticale ;

– se pozitioneaza si se realizeaza camerele de tragere cabluri, fundatiile stalpilor de iluminat, ale lampadarelor, retelele de instalatii, etc. ;

– dupa decopertare imbracamintii asfaltice se va compacta stratul de balast peste care se asterne folia de polietilena si apoi se toarna betonul dupa care se asterne asfaltul.

Pentru platformele dintre liniile III-IV si IV-V:

Se vor demontata dalele prefabricate existente, se va sapa in trensee longitudinale, cu sprijiniri, conform sectiunilor indicate, respectand gabaritul c.f. ;

- se traseaza fata de axul c.f. pozitia elementelor verticale ;

– se pozitioneaza si se realizeaza camerele de tragere cabluri, fundatiile stalpilor de iluminat, ale lampadarelor, retelele de instalatii, etc. ;

– dupa care se va compacta stratul de balast peste care se asterne folia de polietilena si apoi se toarna betonul dupa care se asterne asfaltul.

Se atrage atentia ca in privinta executiei tuturor elementelor peroanelor, reperele de referinta sunt NSS si axa liniilor c.f..

The platforms will be build as follows:

PLATFORM I:

The prefabricated elements will be demounted at the platform ends and the existing hard-covering layer will be removed.

- *excavations will be performed with propping up in longitudinal trench according to the indicated sections; after the compaction of the excavation bottom by watering;*
- *the position of vertical elements will be traced as compared to the track axis;*
- *the cable drawing pits, the foundations of lighting poles, of floor lamps and the networks of installations etc. will be positioned and carried out;*
- *the ballast will be added up to the level specified in the project, it will be compacted, then the polyethylene foil will be laid down;*

The platform at track I shall be rehabilitated by bringing it to the railway gauge 1.725 from the track 1 axis.

PLATFORM BETWEEN LINES II and III:

The prefabricated slabs will be demounted at the platform edge and the existing hard-covering layer will be removed from the platform.

- *excavations will be performed with propping up in longitudinal* 90cm wide trenches will be excavated with proppings at 2.275m from the railway axis *in compliance with the indicated sections and with the railway gauge;*
- *the position of vertical elements will be traced as compared to the track axis;*
- *the cable drawing pits, the foundations of lighting poles, of floor lamps and the networks of installations etc. will be positioned and carried out;*
- *after uncovering the asphalt coating, the ballast layer will be compacted, the polyethylene foil will be placed, then the concrete will be cast and finally the asphalt will be laid down.*

FOR THE PLATFORMS BETWEEN LINES III-IV AND IV-V:

The existing prefabricated slabs will be demounted and excavations will be performed with propping up in longitudinal trench in compliance with the indicated sections and with the railway gauge.

- *the position of vertical elements will be traced as compared to the track axis;*
- *the cable drawing pits, the foundations of lighting poles, of floor lamps and the networks of installations etc. will be positioned and carried out;*
- *the ballast layer will be compacted, the polyethylene foil will be placed, then the concrete will be cast and finally the asphalt will be laid down;*

Note importante:

1.Pentru a nu pune in pericol stabilitatea copertinei(fundatii, stalpi, grinzi), pe perioada lucrarilor la peronul corespondent al acesteia se va realiza sustinerea obligatorie si asigurarea elementelor structurale(stalpi, grinzi, elemente ECP) su esafodaje solide, contravantuite si sprijinite adecvate(dulapi de lemn si elemente metalice solide)

2.Toate aceste lucrari de sprijiniri se executa inaintea inceperii lucrarilor de sapaturi la peron si nu se vor desface decat dupa incheierea excutiei peronului si a lucrarilor de reabilitare la copertina.

3.Sapaturile in dreptul fundatiei copertinei existente se vor executa i n tronsoane de cate 1mx1,30m, cu sprijiniri si in ordinea notata pe desen, impreuna cu turnarea de beton simplu sub prefabricate.

4.La dezvelirea primei fundatii a copertinei se va chema proiectantul.

5. La executia sapaturilor pe tronsoane pentru fundarea zidurilor de spijin prefabricate tip "ZP" se va urmari a nu se disloca pamantul de sub fundatia copertinei existente.

6. In cazul in care se va produce acest fenomen, se va turna betonul simplu si sub talpa fundatiei in locul descoperit.

7.Sapaturile pentru executia drenurilor se vor realiza intr-o alta etapa.

ATENTIE:

Nu se vor face lucrari de sapaturi in jurul fundatiei copertinei pe timp ploios sau cu ninsoare.

IMPORTANT NOTE:

1. In order not to endanger the stability of the canopy (foundations, columns, beams), during the work period for its correspondent platform, the compulsory propping and the ensuring of structural elements (columns, beams, ECP elements) shall be carried out using solid scaffolding, bracings and adequate proppings (timbering and solid metallic elements).
2. All these propping works are to be carried out before the beginning of the excavation works for the platform and shall not be dismantled until the conclusion of the construction process: for the platform and the canopy rehabilitation works.
3. The excavations along the foundation of the existing canopy will be carried out in 1m x 1,30m sections, with propping and in the order noted on the drawing, along with the casting of simple concrete under the precast elements.
4. The designing engineer will be called when exposing the first canopy foundation.
5. The dislocation of the soil under the foundation of the existing canopy is to be avoided when performing the excavations on sections for founding the ZP precast retaining wall-type elements.
6. If this phenomenon will occur, the simple concrete shall be also cast under the base of the foundation, in the exposed space.
7. The excavations for constructing the drains will be carried out in another stage.

Attention!

No excavation works will be carried out around the canopy foundation during rainy or snowy periods.

TREBUIE AVUT IN VEDERE CA PEROANELE NOU PROIECTATE URMARESC PROFILUL LONGITUDINAL AL LINIILOR.

THE NEW PLATFORMS DESIGNED FOLLOW THE LONGITUDINAL STRING COURSE OF THE TRACKS.

MATERIALE / MATERIALS :
BETON SIMPLU/ CONCRETE :
C8/10 - P4 - T3 - IIA - SR32.5 ,
C2,8/3,5 - P4 - T3 - IIA - SR32.5;
BETON ARMAT / REINFORCED CONCRETE :
C16/20 - P4 - T3 - IIA - SR32.5;
OTEL BETON/ REINFORCEMENT :OB37;

Extras de armatura OB37:
5000 mp x (5+5)ml/mp x 0,395 kg/ml = 19750 kg

Indice Index	Data Date	Modificare Modification/Revision	Proiectant Designer	Aprobat Consultant Approved Consultant	Aprobat CFR Approved CFR
D					
C					
B					
A					

GUVERNUL ROMANIEI
ROMANIAN GOVERNMENT

PROIECT FINANŢAT DE UNIUNEA EURO
EUROPEAN UNION FINANCED PR

C.N.C.F. "C.F.R." - S.A.

CLIENT / CLIENT

ITALFERR GRUPPO FERROVIE DELLO STATO *Joint Venture leader* — Scott Wilson — OBERMEYER PLANEN + BERATEN GmbH — TECNIC Consulting Engineers

CONSULTANT / CONSULTANT			Data Date	Semnătură Signature
Aprobat Approved	Şef proiect Project manager	R. Liuzza	12.2011	
Aprobat Approved	Coordonator Secţiune 1 Section 1 Coordinator	C. Gambelli	12.2011	
Verificat Checked	Expert Cheie Key Expert	Giuseppe Fioravanti	12.2011	

SUBCONTRACTANT / SUBCONTRACTOR AREX				
Aprobat Approved	Responsabil Subconsultant Subconsultant Responsible	A.Stanciu - Dinulescu	12.2011	
Întocmit Elaborated	Proiectant Designer	Georgescu Georgiana	12.2011	

Reabilitarea liniei de cale ferata Braşov - Simeria, parte componentă a coridorului IV Pan European, pentru circulaţia trenurilor cu viteza maximă de 160 km/h,
Tronsonul : Braşov - Sighişoara
Rehabilitation of the railway line Braşov - Simeria, component Part of the IV Pan-European Corridor, for the trains circulation with maximum speed of 160 km/h,
Section : Braşov - Sighişoara

Proiect/Project
2004/RO/16/P/PA/003

Faza / Phase:
D.E. / E.D.

Denumire desen / Drawing Title :

Sectiuni caracteristice peroane statia Sighisoara/
Sighisoara Station Characteristic platform cross sections

Codificare / Codification System	Scara / Scale 1: 50	LOT / LOT	Nr. / No 01 / 01

E A 5 1 | 0 1 | E | 2 1 | W B | C C | 0 1 | 2 | 2 | 0 0 3 | 1