TABLOU ELECTRIC GENERAL T.G. - SCHEMA MONOFILARA
T.G. GENERAL ELECTRIC BOARD - SINGLE-WIRE DIAGRAM

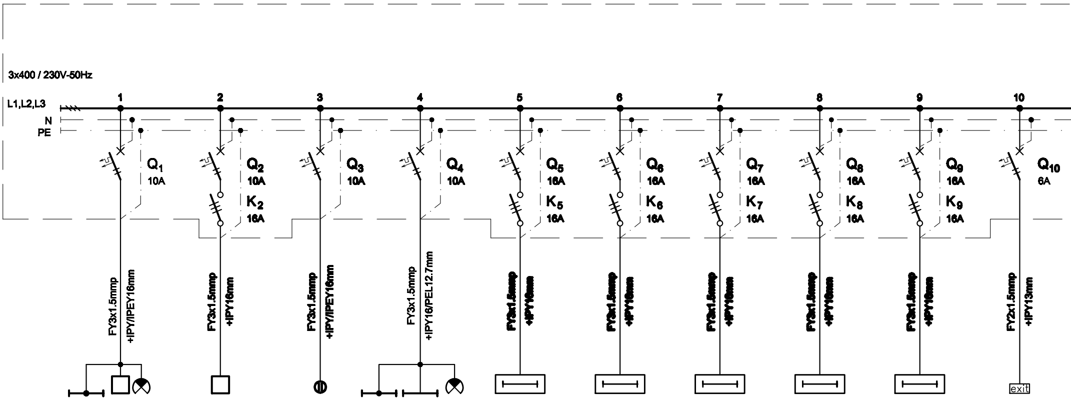
3x400 / 230V-50Hz
L1,L2,L3
N
PE
1
2
3
4
5
6
7
8
9
10
Q_1 10A
Q_2 10A
K_2 16A
Q_3 10A
Q_4 10A
Q_5 16A
K_5 16A
Q_6 16A
K_6 16A
Q_7 16A
K_7 16A
Q_8 16A
K_8 16A
Q_9 16A
K_9 16A
Q_{10} 6A
FY3x1.5mmp +IPY/IPEY16mm
FY3x1.5mmp +IPY16mm
FY3x1.5mmp +IPY/IPEY16mm
FY3x1.5mmp +IPY16/PEL12.7mm
FY3x1.5mmp +IPY16mm
FY3x1.5mmp +IPY16mm
FY3x1.5mmp +IPY16mm
FY3x1.5mmp +IPY16mm
FY3x1.5mmp +IPY16mm
FY2x1.5mmp +IPY13mm
exit

Nr. circuit *Circuit number*	1	2	3	4	5	6	7	8	9	10
Pi [kW]	0.86	0.3	0.57	0.36	1.2	1.5	1.5	1.5	1.5	0.096
Destinatia *Destination*	VESTIBUL, SEF STATIE, BIROU MISCARE, HOL, BIROU MAGAZIONER *WINDFANG, OFFICE STATION MASTER, MOVEMENT OFFICE, SMALL HALL, STORAGE OFFICE* 9LL / *Lamps*	HOL CENTRAL / SALA ASTEPTARE, SAS *WAITING ROOM, SMALL HALL* 3LL / *Lamps*	CABINA PERSOANE DIZABILITATI, MAMA SI COPILUL, GRUP SANITAR PUBLIC *WC FOR DISABLED, MOTHER AND CHILD, PUBLIC WC* 9LL / *Lamps*	CASA SCARI *STAIR* 4LL / *Lamps*	PICTOGRAME *PICTOGRAMS* 6Buc. / *Pieces*	PICTOGRAMA *PICTOGRAM* 1Buc. / *Piece*	PICTOGRAMA *PICTOGRAM* 1Buc. / *Piece*	PICTOGRAMA *PICTOGRAM* 1Buc. / *Piece*	PICTOGRAMA *PICTOGRAM* 1Buc. / *Piece*	ILUMINAT DE SIGURANTA *EMERGENCY LIGHTING* 6Buc. / *Pieces*

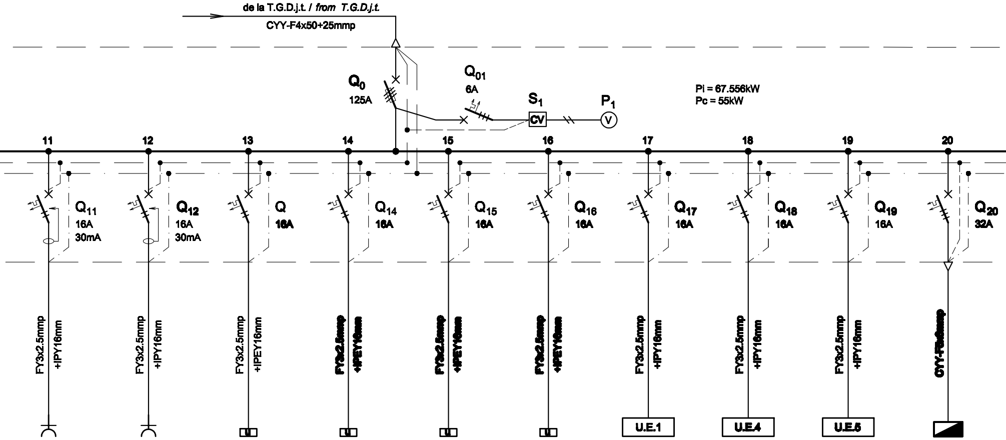
de la T.G.D.j.t. / *from T.G.D.j.t.*
CYY-F4x50+25mmp
Q_0
125A
Q_{01}
6A
S_1
CV
P_1
V
Pi = 67.556kW
Pc = 55kW
11
12
13
14
15
16
17
18
19
20
Q_{11}
16A
30mA
Q_{12}
16A
30mA
Q
16A
Q_{14}
16A
Q_{15}
16A
Q_{16}
16A
Q_{17}
16A
Q_{18}
16A
Q_{19}
16A
Q_{20}
32A
FY3x2.5mmp +IPY16mm
FY3x2.5mmp +IPY16mm
FY3x2.5mmp +IPEY16mm
FY3x2.5mmp +IPEY16mm
FY3x2.5mmp +IPEY16mm
FY3x2.5mmp +IPEY16mm
FY3x2.5mmp +IPY16mm
FY3x2.5mmp +IPY16mm
FY3x2.5mmp +IPY16mm
CYY-F5x6mmp
U.E.1
U.E.4
U.E.5

11	12	13	14	15	16	17	18	19	20
2	2	2.5	2.5	2.5	2.5	2	2	2	16.45
BIROU MISCARE, SEF STATIE, CASA DE BILETE *MOVEMENT OFFICE, OFFICE STATION MASTER, TIKETING* **5LP / *Sockets outlet***	HOL CENTRAL / SALA ASTEPTARE, BIROU MAGAZIONER *WAITING ROOM, STORAGE OFFICE* **4LP / *Sockets outlet***	**USCATOR DE MAINI** *HAND DRYER* **1Buc. / *Piece***	USCATOR DE MAINI *HAND DRYER* **1Buc. / *Piece***	USCATOR DE MAINI *HAND DRYER* **1Buc. / *Piece***	**USCATOR DE MAINI** ***HAND DRYER*** **1Buc. / *Piece***	UNITATE EXTERIOARA DE CLIMATIZARE SISTEM MONOSPLIT *OUTDOOR UNIT AIR CONDITIONING SYSTEM MONOSPLIT* **1Buc. / *Piece***	**UNITATE EXTERIOARA DE CLIMATIZARE SISTEM MONOSPLIT** ***OUTDOOR UNIT AIR CONDITIONING SYSTEM MONOSPLIT*** **1Buc. / *Piece***	UNITATE EXTERIOARA DE CLIMATIZARE SISTEM MONOSPLIT *OUTDOOR UNIT AIR CONDITIONING SYSTEM MONOSPLIT* **1Buc. / *Piece***	**CENTRALA TERMICA TABLOU ELECTRIC - T c.t.** ***THERMAL PLANT ELECTRIC BOARD - T c.t.***

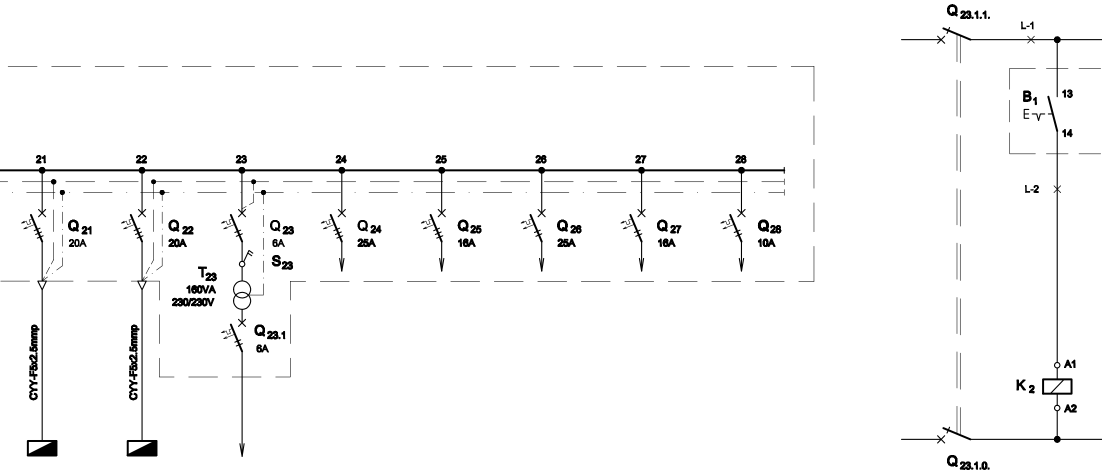
21
22
23
24
25
26
27
28
Q 21
20A
Q 22
20A
Q 23
6A
S23
T23
160VA
230/230V
Q 23.1
6A
Q 24
25A
Q 25
16A
Q 26
25A
Q 27
16A
Q 28
10A
CYY-F5x2.5mmp
CYY-F5x2.5mmp
Q 23.1.1.
L-1
B1
E
13
14
L-2
A1
K 2
A2
Q 23.1.0.

21	22	23	24	25	26	27	28
5.02	3.7	0.16	4	3	3	2	1
SPATIU COMERCIAL **TABLOU ELECTRIC - T Sp.com.** **COMMERCIAL AREA** ***ELECTRIC BOARD*** ***Tsp.com.***	**SUBSOL** **TABLOU ELECTRIC - T.S.** ***BASEMENT*** ***ELECTRIC BOARD - T.S.***	CIRCUIT COMANDA ILUMINAT INTERIOR ***COMMAND CIRCUIT*** ***INDOOR LIGHTING***	**REZERVA TRIFAZATA** ***THREE-PHASE RESERVE***	**REZERVA TRIFAZATA** ***THREE-PHASE RESERVE***	**REZERVA MONOFAZATA** ***SINGLE-PHASE RESERVE***	**REZERVA MONOFAZATA** ***SINGLE-PHASE RESERVE***	**REZERVA MONOFAZATA** ***SINGLE-PHASE RESERVE***

PROTECTIE CIRCUIT DE COMANDA *PROTECTION OF THE COMMAND CIRCUIT*	**COMANDA ILUMINAT HOL CENTRAL / SALA ASTEPTARE** ***LIGHTING COMMAND WAITING ROOM***

TABLOU ELECTRIC GENERAL T.G.
T. G. GENERAL ELECTRIC BOARD

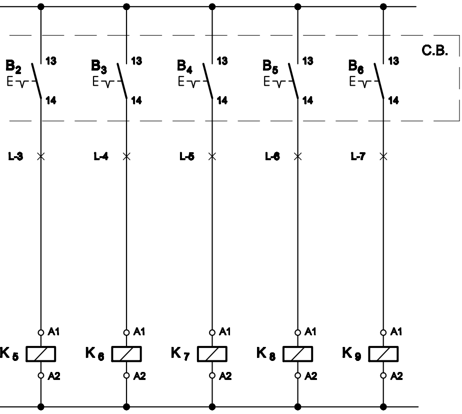
C.B.
B2
B3
B4
B5
B6
13
14
E
L-3
L-4
L-5
L-6
L-7
K5
K6
K7
K8
K9
A1
A2

COMANDA APRINDERE STINGERE PICTOGRAME	COMANDA APRINDERE STINGERE PICTOGRAME	COMANDA APRINDERE STINGERE PICTOGRAME	COMANDA APRINDERE STINGERE PICTOGRAME	COMANDA APRINDERE STINGERE PICTOGRAME
ON-OFF COMMAND OF THE PICTOGRAMS	***ON-OFF COMMAND OF THE PICTOGRAMS***	*ON-OFF COMMAND OF THE PICTOGRAMS*	*ON-OFF COMMAND OF THE PICTOGRAMS*	*ON-OFF COMMAND OF THE PICTOGRAMS*

Nr. *No.*	Simbol *Symbol*	Denumirea aparatului *Equipment denomination*	Caracteristici tehnice *Technical data*	Buc. *Pcs.*	Observatii *Remarks*
0	1	2	3	4	5
1	Q0	Separator de sarcina tripolar cu fuzibil / *Three-poles switch-disconnector with fusible*	In=125A Un=400V Uimp=8kV f=50Hz Icm=2.2kA	1	
2	Q1,...,Q4,Q28	Intrerupator automat bipolar, curba B *Two-poles circuit breaker, curve B*	In=10A Un=230V Icu=6kA f=50Hz	5	
3	Q11,Q12	Intrerupator automat bipolar cu protectie la curent diferential rezidual, curba C / *Two-poles circuit breaker with protection at residual differential current device, curve C*	In=16A Un=230V Icu=6kA f=50Hz IΔn=0,03A Tip A Nivel de imunitate 250A la forma de unda 8/20 μS *Level of immunity 250A to wave form 8/20μS*	2	
4	Q10	Intrerupator automat bipolar, curba B *Two-poles circuit breaker, curve B*	In=6A Un=230V Icu=6kA f=50Hz	1	
5	Q13,Q14,Q15, Q16,Q17,Q18, Q19,Q27	Intrerupator automat bipolar, curba C *Two-poles circuit breaker, curve C*	In=16A Un=230V Icu=6kA f=50Hz	8	
6	Q20	Intrerupator automat tripolar, curba C *Three-poles circuit breaker, curve C*	In=32A Un=400V Icu=6kA f=50Hz	1	
7	Q21,Q22	Intrerupator automat tripolar, curba C *Three-poles circuit breaker, curve C*	In=20A Un=400V Icu=6kA f=50Hz	2	
8	Q24	Intrerupator automat tripolar, curba C *Three-poles circuit breaker, curve C*	In=25A Un=400V Icu=6kA f=50Hz	1	
9	Q25	Intrerupator automat tripolar, curba C *Three-poles circuit breaker, curve C*	In=16A Un=400V Icu=6kA f=50Hz	1	
10	Q26	Intrerupator automat bipolar, curba C *Two-poles circuit breaker, curve C*	In=25A Un=230V Icu=6kA f=50Hz	1	

- SPECIFICATIE DE APARATAJ
- *EQUIPMENT SPECIFICATION*

0	1	2	3	4	5
11	Q5,Q6,Q7,Q8,Q9	Intrerupator automat bipolar, curba B *Two-poles circuit breaker, curve B*	In=16A Un=230V Icu=6kA f=50Hz	5	
12	Q01	Intrerupator automat tripolar, constructie modulara, curba C *Three-poles circuit breaker, modular construction, curve C*	In=6A Un=400V Icu=25kA f=50Hz	1	
13	P1	Voltmetru feromagnetic *Ferromagnetic voltmeter*	Domeniu / *Range* 0...600 V	1	
14	S1	Comutator voltmetric *Voltmetric switch*	In=10A Un=500V f=50Hz	1	
15	K2,K5,K6, K7,K8,K9	Contactor electromagnetic tripolar de curent alternativ / *Three-poles electromagnetic a.c. contactor*	In=16A Un=400A Uc=230V f=50Hz	6	
16	Q23,Q23.1	Intrerupatoare automate bipolare, curba D / *Two-poles circuit breaker, curve D*	In=6A Un=230V f=50Hz Icu=10kA	2	
17	T23	Transformator monofazat uscat de comanda / *Single-phase dry-type command transformer*	Sn=160VA U1n=230V U2n=230V f=50Hz	1	
18	S23	Comutator cu came cu doua pozitii si un etaj / *Switch with cams having two-positions and a floor*	Un=500V In=16A f=50Hz	1	
19	B1,B2,B3, B4,B5,B6	Butoane de comanda luminoase cu retinere / *Light command buttons with retainer*	Ui=500V In=6A f=50Hz IP67	6	Butoanele se vor monta in C.B. (cutia cu butoane) *Buttons will be installed in C.B.(box of buttons)*
20	L	Cleme de racordare *Connection clamps*	Un=660V In=16A f=50Hz	7	
21	-	Cutie / *Box*	IP30, Clasa I / *Class I*	1	

D					
C					
B					
A					
Indice Index	Data Date	Modificare Modification/Revision	Proiectant Designer	Aprobat Consultant Approved Consultant	Aprobat CFR Approved CFR

GUVERNUL ROMANIEI
ROMANIAN GOVERNMENT

PROIECT FINANŢAT DE UNIUNEA EUROPEANĂ
EUROPEAN UNION FINANCED PROJECT

CLIENT / CLIENT

C.N.C.F. "C.F.R." - S.A.

ITALFERR
GRUPPO FERROVIE DELLO STATO
Joint Venture leader

Scott Wilson

OBERMEYER
PLANEN + BERATEN GmbH

TECNIC
Consulting Engineers

CONSULTANT / CONSULTANT

			Data Date	Semnătură Signature
Aprobat Approved	Şef proiect Project manager	R. Liuzza	12.2011	
Aprobat Approved	Coordonator Secţiune 1 Section 1 Coordinator	C. Gambelli	12.2011	
Verificat Checked	Expert Verificator Checking Expert	G. Fioravanti	12.2011	

SUBCONTRACTANT / SUBCONTRACTOR

AREX COMPANY

Aprobat Approved	Responsabil Subconsultant Subconsultant Responsible	A.Stanciu - Dinulescu	12.2011	
Întocmit Elaborated	Proiectant Designer	D. Matei	12.2011	

Reabilitarea liniei de cale ferata Braşov - Simeria, parte componentă a coridorului IV Pan European, pentru circulaţia trenurilor cu viteza maximă de 160 km/h,
Tronsonul : Braşov - Sighişoara
Rehabilitation of the railway line Braşov - Simeria, component Part of the IV Pan-European Corridor, for the trains circulation with maximum speed of 160 km/h,
Section : Braşov - Sighişoara

Proiect/Project
2004/RO/16/P/PA/003

Faza / Phase:
D.E. / E.D.

Denumire desen / Drawing Title :

Tablou electric general T.G. - Staţia Albeşti Târnava;
Albesti Tarnava station - T.G. general electric board

Codificare / Codification System	Scara / Scale	LOT / LOT	Nr. / No 01 / 01

E A 5 1 0 1 E 1 9 B X I E 0 0 3 1 0 4 3 1

A3(297x1995)