NOTA: Acest desen nu constituie o obligatie de aplicare de către contractor.
El reprezintă doar un exemplu de circuit de cale utilizat la CFR si nu trebuie aplicat ca atare.

NOTE: It is not compulsory for the contractor to apply this drawing.
It is only an example of track circuit in use at CFR and shall not be applied as such.

D					
C					
B					
A					
Indice Index	Data Date	Modificare Modification/Revision	Proiectant Designer	Aprobat Consultant Approved Consultant	Aprobat CFR Approved CFR

GUVERNUL ROMANIEI
ROMANIAN GOVERNMENT

PROIECT FINANȚAT DE UNIUNEA EUROPEANĂ
EUROPEAN UNION FINANCED PROJECT

CFR

C.N.C.F. "C.F.R." - S.A.

CLIENT / CLIENT

ITALFERR
GRUPPO FERROVIE DELLO STATO
Joint Venture leader

Scott Wilson

OBERMEYER
PLANEN + BERATEN GmbH

TECNIC
Consulting Engineers

CONSULTANT / CONSULTANT			Data Date	Semnătură Signature
Aprobat Approved	Şef proiect Project manager	R. Liuzza	12.2011	
Aprobat Approved	Coordonator Secţiune 1 Section 1 Coordinator	C. Gambelli	12.2011	
Verificat Checked	Expert Cheie Key Expert	P. Amodio	12.2011	

SUBCONTRACTANT / SUBCONTRACTOR

AREX COMPANY

Aprobat Approved	Responsabil Subconsultant Subconsultant Responsible	A. Stanciu - Dinulescu	12.2011	
Întocmit Elaborated	Proiectant Designer	Angelescu Sergiu	12.2011	

Reabilitarea liniei de cale ferata Braşov - Simeria, parte componentă a coridorului IV Pan European, pentru circulaţia trenurilor cu viteza maximă de 160 km/h,
Tronsonul : Braşov - Sighişoara
Rehabilitation of the railway line Braşov - Simeria, component Part of the IV Pan-European Corridor, for the trains circulation with maximum speed of 160 km/h,
Section : Braşov - Sighişoara

Proiect/Project
2004/RO/16/P/PA/003

Faza / Phase:
D.E. / D.D.

Denumire desen / Drawing Title :

Statia / Station BOD
Fise picheti tip pentru circuite de cale
Model boxes for track circuit equipment

Codificare / Codification System	Scara / Scale Fără / No scale	LOT / LOT	Nr. / No 01 / 20

E A 5 1 | 0 1 | E | 0 5 | B X | S E | 0 0 | 5 | 2 | 0 2 0 | 0

Tabel cu valorile condensatoarelor C1, C2 la capetele de emisie

Circuitul de cale	Secventa	Tip Circuit	Lungimea circuitului de cale (m)	Valoarea capacitatii (μF)	
				C1	C2
X−1AD	3	bifilar	1460	**3 μF**	**0,47 μF**
XF−1AD	1	bifilar	1460	**3 μF**	**0,47 μF**
023 C	1	bifilar	290	**1 μF**	**0,47 μF**
033 C	3	bifilar	345	**1 μF**	**0,47 μF**
1−9 Si	2	bifilar	380	**1 μF**	**0,47 μF**
3−7 Si	1	bifilar	360	**1 μF**	**0,47 μF**
11−15 Si	3	bifilar	420	**1 μF**	**0,47 μF**
025 C	1	bifilar	220	**0,47 μF**	**0,47 μF**
035 C	2	bifilar	220	**0,47 μF**	**0,47 μF**
17 Si	3	bifilar	140	**0,47 μF**	**0,47 μF**
19 Si	1	bifilar	105	**0,47 μF**	**0,47 μF**
1L	2	bifilar	780	**2 μF**	**0,47 μF**
IIL	4	bifilar	825	**2 μF**	**0,47 μF**
IIIL	3	bifilar	785	**2 μF**	**0,47 μF**
4L	4	bifilar	755	**2 μF**	**0,47 μF**
5L	2	bifilar	665	**2 μF**	**0,47 μF**
6L	4	bifilar	640	**2 μF**	**0,47 μF**
024 C	4	bifilar	345	**1 μF**	**0,47 μF**
034 C	2	bifilar	290	**1 μF**	**0,47 μF**
2−8 Si	3	bifilar	365	**1 μF**	**0,47 μF**
4−6 Si	2	bifilar	310	**1 μF**	**0,47 μF**
10−14 Si	3	bifilar	185	**0,47 μF**	**0,47 μF**
12−18 Si	2	bifilar	245	**1 μF**	**0,47 μF**
16 Si	3	monofilar	130	**1 μF**	**0,47 μF**
20−24 Si	4	monofilar	210	**1 μF**	**0,47 μF**
22 Si	4	monofilar	155	**1 μF**	**0,47 μF**
26−30 Si	3	bifilar	355	**1 μF**	**0,47 μF**
02 C	4	monofilar	50	**1 μF**	**0,47 μF**
Y−1ADa	4	bifilar	1035	**2 μF**	**0,47 μF**
YF−1ADa	2	bifilar	1035	**2 μF**	**0,47 μF**

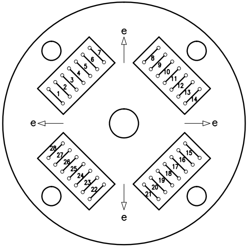
e
e
e
e
1
2
3
4
5
6
7
8
9
10
11
12
13
14
15
16
17
18
19
20
21
22
23
24
25
26
27
28

C4−28

DA4

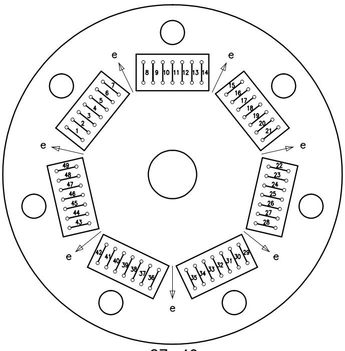
e
e
e
e
e
e
e
1
2
3
4
5
6
7
8
9
10
11
12
13
14
15
16
17
18
19
20
21
22
23
24
25
26
27
28
29
30
31
32
33
34
35
36
37
38
39
40
41
42
43
44
45
46
47
48
49

C7−49

DM1,DM3,DM2,DM4,DM6,DR1,DR2,DR4,DA2,DS1,
DS3,DS5,DS7,DS2,DS4,DS6,DS8,DS10

CUTII DE DISTRIBUTIE

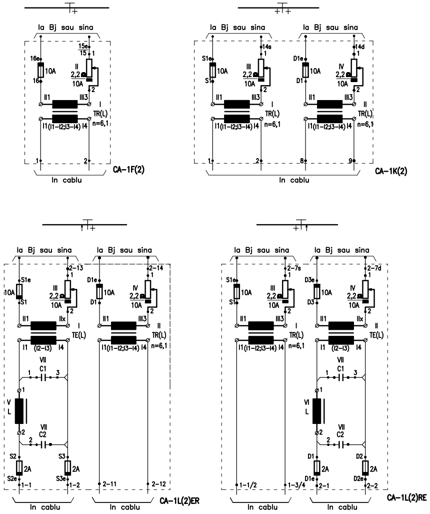
la Bj sau sina
16e
16
10A
15e
15
1
II
2,2Ω
10A
2
II1
III3
I
TR(L)
I1(I1−I2;I3−I4) I4
n=6,1
1
2
In cablu
CA−1F(2)
la Bj sau sina
la Bj sau sina
S1e
S1
10A
14s
III
D1e
D1
14d
IV
TR(L)
8
9
CA−1K(2)
2−13
2−14
S1e
S1
D1e
D1
III
IV
IIx
TE(L)
I1 (I2−I3) I4
VII
C1
1
3
V
L
VII
C2
2
S2
S3
2A
S2e
S3e
1−1
1−2
2−11
2−12
In cablu
In cablu
CA−1L(2)ER
2−7s
2−7d
S1e
S1
D3e
D3
VI
L
D1
D2
D1e
D2e
1−1/2
1−3/4
2−1
2−2
CA−1L(2)RE

Nota: − La circuitele la care se controleaza ramificatiile, valoarea rezistentei din aparatajul de receptie este de 6Ω/3,3A

− Valoarea condensatorului C1 se coreleaza cu lungimea circuitului de cale si cu tipul de circuit (mono sau bifilar).

SCHEME DE CONECTARE A APARATAJULUI IN CUTII DE APARATAJ PENTRU CIRCUITUL DE CALE

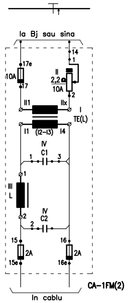
la Bj sau sina
14
1
17e
10A
17
II
2,2 Ω
10A
2
II1
IIx
I
TE(L)
I1
(I2–I3)
I4
IV
C1
1
3
1
III
L
2
IV
C2
2
15
16
2A
2A
15e
16e
CA–1FM(2)
In cablu

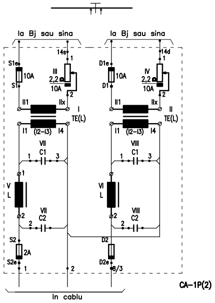
la Bj sau sina
la Bj sau sina
14s
S1e
10A
S1
III
2,2 Ω
10A
1
2
II1
IIx
I
TE(L)
I1
(I2–I3)
I4
VII
C1
1
3
V
L
1
2
VII
C2
2
S2
2A
S2e
1
2
14d
D1e
10A
D1
IV
2,2 Ω
10A
1
2
II1
IIx
II
TE(L)
I1
(I2–I3)
I4
VIII
C1
1
3
VI
L
1
2
VIII
C2
2
D2
D2e
6/3
In cablu
CA–1P(2)

Nota: Valoarea condensatorului C1 se coreleaza cu lungimea circuitului de cale si cu tipul de circuit (mono sau bifilar).

SCHEME DE CONECTARE A APARATAJULUI IN CUTII DE APARATAJ PENTRU CIRCUITUL DE CALE BIFILAR

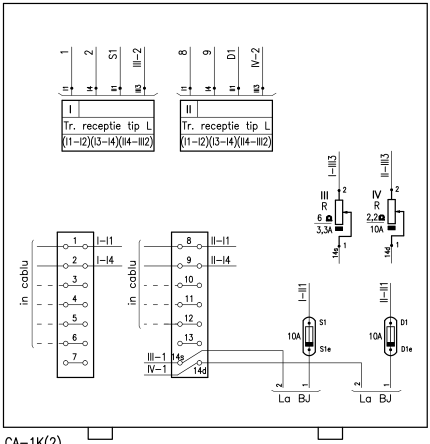
1
2
S1
III–2
I1
I4
II1
III3
I
Tr. receptie tip L
(I1–I2)(I3–I4)(II4–III2)
8
9
D1
IV–2
I1
I4
II1
III3
II
Tr. receptie tip L
(I1–I2)(I3–I4)(II4–III2)
I–III3
2
III
R
6 Ω
3,3A
1
14s
II–III3
2
IV
R
2,2 Ω
10A
1
14d
in cablu
1
I–I1
2
I–I4
3
4
5
6
7
in cablu
8
II–I1
9
II–I4
10
11
12
13
III–1
14s
IV–1
14d
I–II1
S1
10A
S1e
II–II1
D1
10A
D1e
2
1
La BJ
2
1
La BJ

CA–1K(2)
BIF

17b Si; IIL C
(11–15)b Si; 6L C

CUTIE APARATAJ PENTRU DOUA RECEPTII

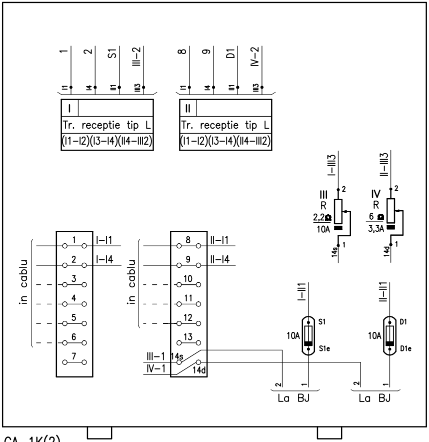
1
2
S1
III–2
8
9
D1
IV–2
I1
I4
II1
II3
I
Tr. receptie tip L
(I1–I2)(I3–I4)(II4–III2)
II
Tr. receptie tip L
(I1–I2)(I3–I4)(II4–III2)
I–III3
II–III3
III
R
2,2Ω
10A
IV
R
6 Ω
3,3A
14s
14d
in cablu
in cablu
I–I1
I–I4
II–I1
II–I4
III–1
IV–1
I–II1
II–II1
S1
S1e
D1
D1e
10A
La BJ
La BJ

CA–1K(2)
BIF

IIIL C; 19a Si
5L C; (11–15)a Si

CUTIE APARATAJ PENTRU DOUA RECEPTII

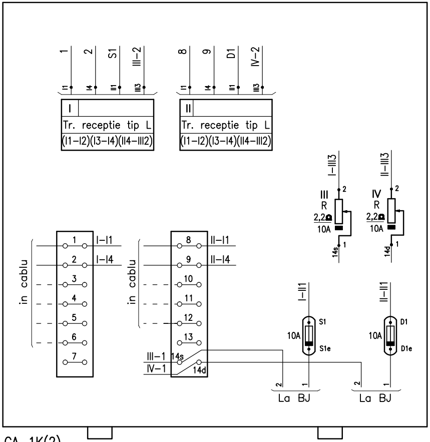
1
2
S1
III–2
8
9
D1
IV–2
I1
I4
II1
II3
I
Tr. receptie tip L
(I1–I2)(I3–I4)(II4–III2)
II
Tr. receptie tip L
(I1–I2)(I3–I4)(II4–III2)
I–III3
II–III3
III
R
2,2Ω
10A
IV
R
2,2Ω
10A
14s
14d
in cablu
in cablu
I–I1
I–I4
II–I1
II–I4
III–1
IV–1
I–II1
II–II1
S1
S1e
D1
D1e
10A
La BJ
La BJ

CA–1K(2)
BIF

1–9 Si; 025 C
4–6 Si; 024 C
034 C; 2–8 Si
1L C; 17a Si
4L C; 19b Si

CUTIE APARATAJ PENTRU DOUA RECEPTII

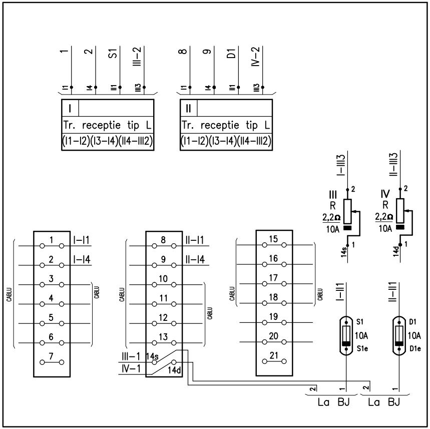
1
2
S1
III-2
8
9
D1
IV-2
I1
I4
II1
II3
I
Tr. receptie tip L
(I1-I2)(I3-I4)(II4-III2)
II
Tr. receptie tip L
(I1-I2)(I3-I4)(II4-III2)
I-III3
II-III3
III
R
2,2Ω
10A
IV
R
2,2Ω
10A
14s
14d
I-I1
I-I4
II-I1
II-I4
CABLU
III-1
IV-1
I-II1
II-II1
S1
10A
S1e
D1
10A
D1e
La BJ
La BJ

CA-1K(4)

035 C; 3-7 Si

CUTIE APARATAJ PENTU DOUA RECEPTII

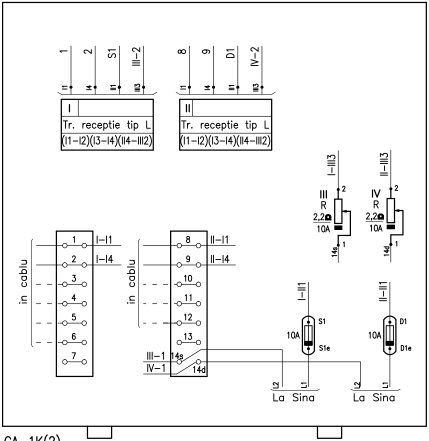
1
2
S1
III-2
8
9
D1
IV-2
I1
I4
II1
II3
I
Tr. receptie tip L
(I1-I2)(I3-I4)(II4-III2)
II
Tr. receptie tip L
(I1-I2)(I3-I4)(II4-III2)
I-III3
II-III3
III
R
2,2Ω
10A
IV
R
2,2Ω
10A
14s
14d
in cablu
in cablu
I-I1
I-I4
II-I1
II-I4
III-1
IV-1
I-II1
II-II1
S1
10A
S1e
D1
10A
D1e
L2
L1
La Sina
La Sina

CA-1K(2)
MONO

16 Si; 02 C

CUTIE APARATAJ PENTRU DOUA RECEPTII

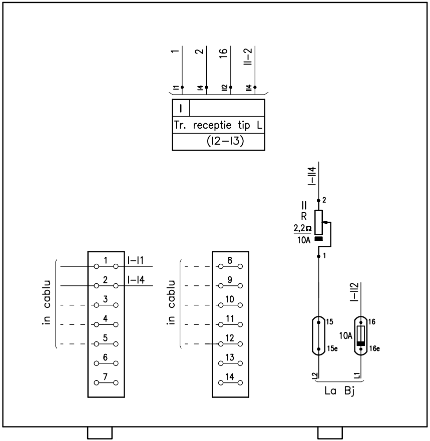
1
2
16
II–2
I1
I4
II2
I4
I
Tr. receptie tip L
(I2–I3)
I–II4
2
II
R
2,2Ω
10A
1
in cablu
1
2
3
4
5
6
7
I–I1
I–I4
in cablu
8
9
10
11
12
13
14
I–II2
15
15e
16
16e
10A
L2
L1
La Bj

CA–1F(2)
BIF

(11–15)c Si
(26–30)c Si

CUTIE APARATAJ PENTRU O RECEPTIE

Statia: BOD **EA51 01 E 05 BX SE 005 2 020 0 11/20**

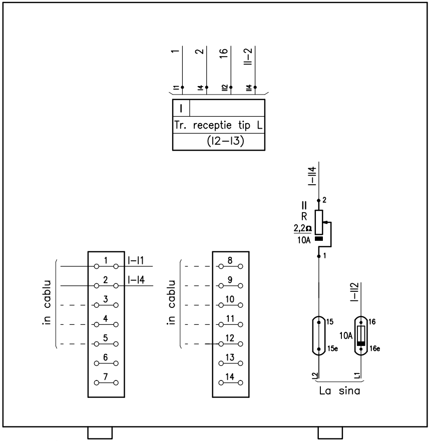
1
2
16
II–2
I1
I4
II2
I4
I
Tr. receptie tip L
(I2–I3)
I–II4
2
II
R
2,2Ω
10A
1
in cablu
1
2
3
4
5
6
7
I–I1
I–I4
in cablu
8
9
10
11
12
13
14
I–II2
15
15e
16
16e
10A
L2
L1
La sina

CA–1F(2)
MONO

20–24 Si
22 Si

CUTIE APARATAJ PENTRU O RECEPTIE

Statia: BOD **EA51 01 E 05 BX SE 005 2 020 0 12/20**

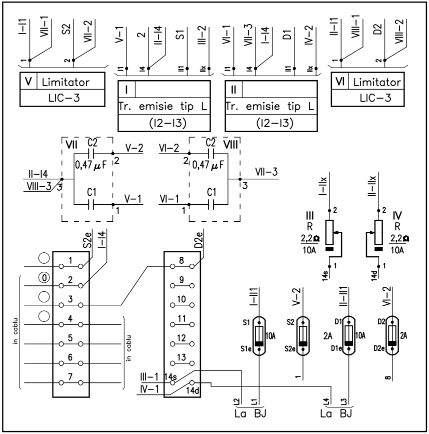
I–I1
VII–1
S2
VII–2
V–1
2
II–I4
S1
III–2
VI–1
VII–3
I–I4
D1
IV–2
II–I1
VIII–1
D2
VIII–2
V Limitator
LIC–3
I
Tr. emisie tip L
(I2–I3)
II
Tr. emisie tip L
(I2–I3)
VI Limitator
LIC–3
VII
C2
0,47 µF
C1
VIII
II–I4
VIII–3
V–2
V–1
VI–2
VI–1
VII–3
I–IIx
II–IIx
III
R
2,2Ω
10A
IV
R
2,2Ω
10A
14s
14d
S2e
I–I4
D2e
1
2
3
4
5
6
7
8
9
10
11
12
13
14s
14d
0
in cablu
in cablu
III–1
IV–1
I–I1
V–2
II–I1
VI–2
S1
S1e
10A
S2
S2e
2A
D1
D1e
10A
D2
D2e
2A
L2
L1
L4
L3
La
BJ
La
BJ

CA–1P(2)

BIF

023 C; 1–9 Si
3–7 Si; 033 C
19 Si; 035 C
025 C; 17 Si
10–14 Si; 4–6 Si

CUTIE APARATAJ PENTU DOUA EMISII

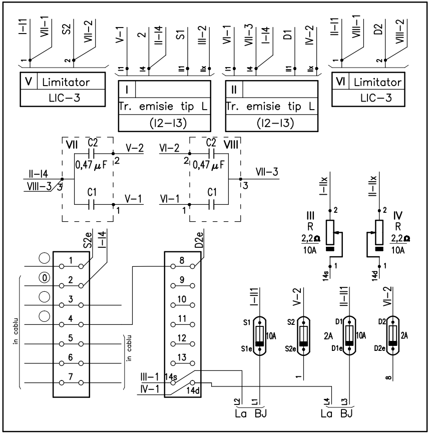
I–I1
VII–1
S2
VII–2
V–1
2
II–I4
S1
III–2
VI–1
VII–3
I–I4
D1
IV–2
II–I1
VIII–1
D2
VIII–2
V Limitator
LIC–3
I
Tr. emisie tip L
(I2–I3)
II
Tr. emisie tip L
(I2–I3)
VI Limitator
LIC–3
VII
C2
0,47 µF
C1
VIII
II–I4
VIII–3
V–2
V–1
VI–2
VI–1
VII–3
I–IIx
II–IIx
III
R
2,2Ω
10A
IV
R
2,2Ω
10A
14s
14d
S2e
I–I4
D2e
1
2
3
4
5
6
7
8
9
10
11
12
13
14s
14d
0
in cablu
in cablu
III–1
IV–1
I–I1
V–2
II–I1
VI–2
S1
S1e
10A
S2
S2e
2A
D1
D1e
10A
D2
D2e
2A
L2
L1
L4
L3
La
BJ
La
BJ

CA–1P(2)

BIF

2–8 Si; 12–18 Si

CUTIE APARATAJ PENTU DOUA EMISII

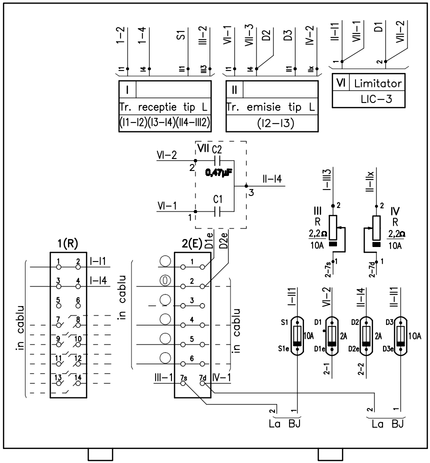
1-2
1-4
S1
III-2
VI-1
VII-3
D2
D3
IV-2
II-I1
VII-1
D1
VII-2
I
Tr. receptie tip L
(I1-I2)(I3-I4)(II4-III2)
II
Tr. emisie tip L
(I2-I3)
VI Limitator
LIC-3
VII C2
VI-2
0,47µF
II-I4
C1
VI-1
I-III3
II-IIx
III
R
2,2Ω
10A
IV
R
2,2Ω
10A
2-7s
2-7d
1(R)
2(E)
D1e
D2e
I-I1
I-I4
in cablu
in cablu
in cablu
III-1
7s
7d
IV-1
I-II1
VI-2
II-I4
II-II1
S1
S1e
10A
D1
D1e
2A
D2
D2e
2A
D3
D3e
10A
2-1
2-2
La BJ
La BJ

CA-1L(2)RE

BIF

(12-18)c Si; 26-30 Si

CUTIE APARATAJ PENTRU RECEPTIE-EMISIE

Statia: BOD

EA51 01 E 05 BX SE 005 2 020 0 15/20

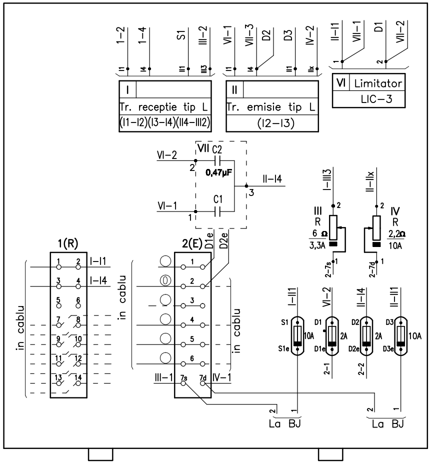
1-2
1-4
S1
III-2
VI-1
VII-3
D2
D3
IV-2
II-I1
VII-1
D1
VII-2
I
Tr. receptie tip L
(I1-I2)(I3-I4)(II4-III2)
II
Tr. emisie tip L
(I2-I3)
VI Limitator
LIC-3
VII C2
VI-2
0,47µF
II-I4
C1
VI-1
I-III3
II-IIx
III
R
6 Ω
3,3A
IV
R
2,2Ω
10A
2-7s
2-7d
1(R)
2(E)
D1e
D2e
I-I1
I-I4
in cablu
in cablu
in cablu
III-1
7s
7d
IV-1
I-II1
VI-2
II-I4
II-II1
S1
S1e
10A
D1
D1e
2A
D2
D2e
2A
D3
D3e
10A
2-1
2-2
La BJ
La BJ

CA-1L(2)RE

BIF

(12-18)a Si; IIIL C
(12-18)b Si; 4L C

CUTIE APARATAJ PENTRU RECEPTIE-EMISIE

Statia: BOD

EA51 01 E 05 BX SE 005 2 020 0 16/20

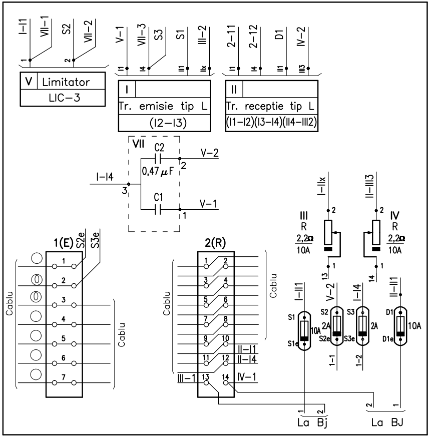
I-I1
VII-1
S2
VII-2
V-1
VII-3
S3
S1
III-2
2-11
2-12
D1
IV-2
V
Limitator
LIC-3
I
Tr. emisie tip L
(I2-I3)
II
Tr. receptie tip L
(I1-I2)(I3-I4)(II4-III2)
VII
C2
0,47 μF
C1
V-2
V-1
I-I4
I-IIx
II-III3
III
R
2,2Ω
10A
IV
R
2,2Ω
10A
1(E)
S2e
S3e
2(R)
Cablu
II-I1
II-I4
III-1
IV-1
I-II1
V-2
I-I4
II-II1
S1
S1e
S2
S2e
S3
S3e
D1
D1e
2A
10A
1-1
1-2
La Bj
La BJ

CA-1L(2)ER

BIF

1L C; (10-14)b Si

CUTIE APARATAJ PENTU EMISIE-RECEPTIE

Statia: BOD **EA51 01 E 05 BX SE 005 2 020 0 17/20**

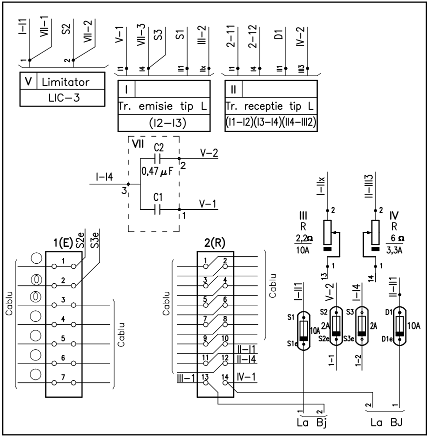
I-I1
VII-1
S2
VII-2
V-1
VII-3
S3
S1
III-2
2-11
2-12
D1
IV-2
V
Limitator
LIC-3
I
Tr. emisie tip L
(I2-I3)
II
Tr. receptie tip L
(I1-I2)(I3-I4)(II4-III2)
VII
C2
0,47 μF
C1
V-2
V-1
I-I4
I-IIx
II-III3
III
R
2,2Ω
10A
IV
R
6 Ω
3,3A
1(E)
S2e
S3e
2(R)
Cablu
II-I1
II-I4
III-1
IV-1
I-II1
V-2
I-I4
II-II1
S1
S1e
S2
S2e
S3
S3e
D1
D1e
2A
10A
1-1
1-2
La Bj
La BJ

CA-1L(2)ER

BIF

IIL C; (10-14)a Si
5L C; (26-30)a Si
6L C; (26-30)b Si

CUTIE APARATAJ PENTU EMISIE-RECEPTIE

Statia: BOD **EA51 01 E 05 BX SE 005 2 020 0 18/20**

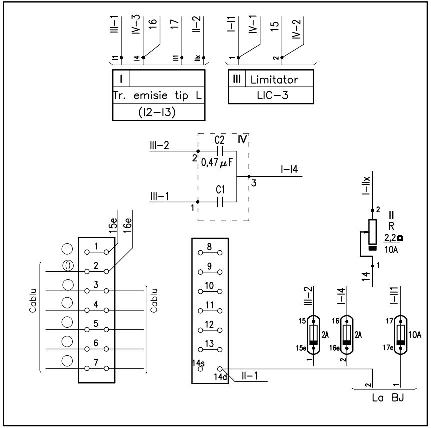
III–1
IV–3
16
17
II–2
I–I1
IV–1
15
IV–2
I1
I4
II1
IIx
1
2
I
Tr. emisie tip L
(I2–I3)
III
Limitator
LIC–3
III–2
C2
IV
2
0,47 µF
I–I4
3
III–1
C1
1
I–IIx
2
II
R
2,2Ω
10A
1
14
15e
16e
1
2
3
4
5
6
7
Cablu
Cablu
8
9
10
11
12
13
14s
14d
II–1
III–2
I–I4
I–II1
15
2A
15e
1
16
2A
16e
2
17
10A
17e
1
2
1
La BJ

CA–1FM(2)

BIF

11–15 Si

CUTIE APARATAJ PENTU O EMISIE

Statia: BOD **EA51 01 E 05 BX SE 005 2 020 0 19/20**

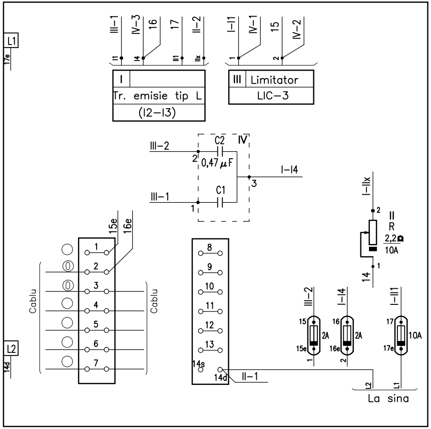
L1
17e
L2
14d
III–1
IV–3
16
17
II–2
I–I1
IV–1
15
IV–2
I1
I4
II1
IIx
1
2
I
Tr. emisie tip L
(I2–I3)
III
Limitator
LIC–3
III–2
C2
IV
2
0,47 µF
I–I4
3
III–1
C1
1
I–IIx
2
II
R
2,2Ω
10A
1
14
15e
16e
1
2
3
4
5
6
7
Cablu
Cablu
8
9
10
11
12
13
14s
14d
II–1
III–2
I–I4
I–II1
15
2A
15e
1
16
2A
16e
2
17
10A
17e
L2
L1
La sina

CA–1FM(2)

MONO

22 Si
16 Si
02 C
20–24 Si

CUTIE APARATAJ PENTU O EMISIE

Statia: BOD **EA51 01 E 05 BX SE 005 2 020 0 20/20**