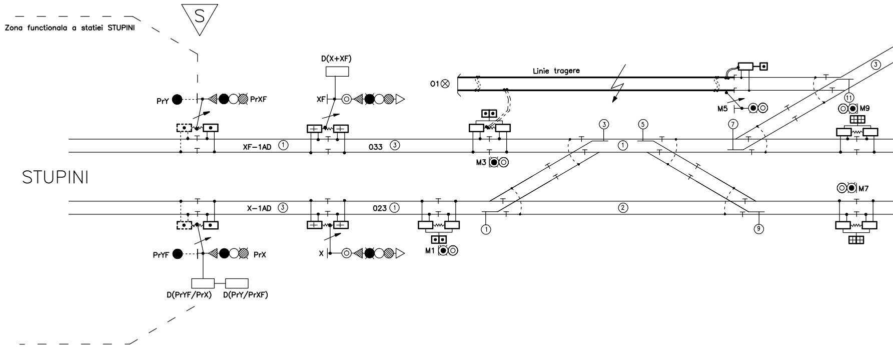
Zona functionala a statiei STUPINI
S
D(X+XF)
PrY
PrXF
XF
Linie tragere
O1
③
M5
⑪
M9
③
⑤
⑦
XF–1AD ①
033 ③
M3
①
STUPINI
M7
X–1AD ③
023 ①
②
①
⑨
PrYF
PrX
X
M1
D(PrYF/PrX)
D(PrY/PrXF)

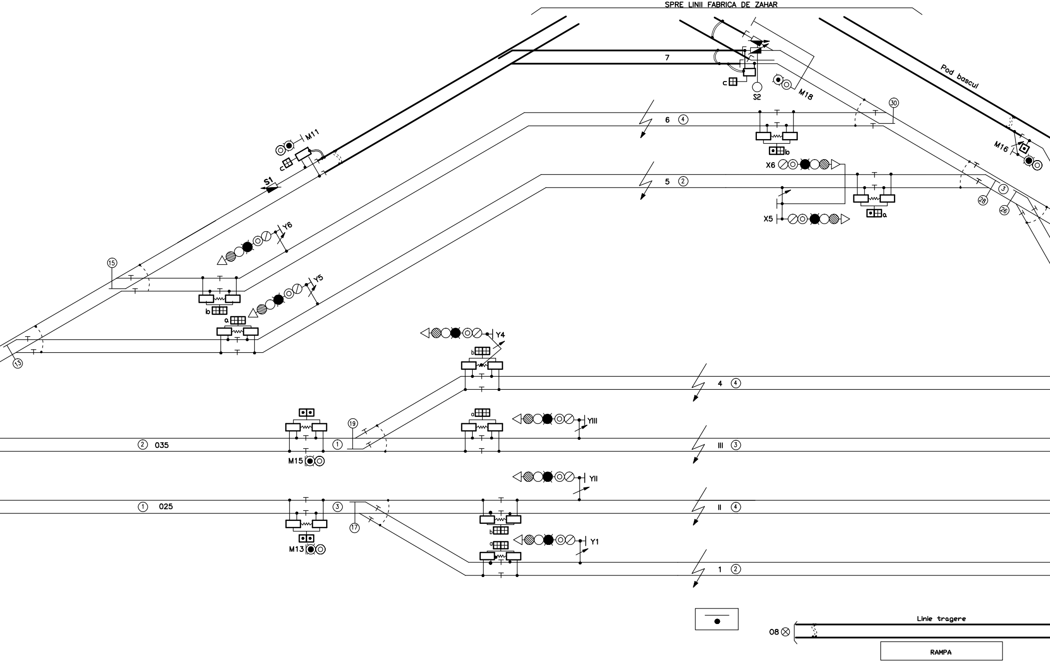
SPRE LINII FABRICA DE ZAHAR
7
c
S2
M18
Pod bascul
M11
c
S1
6 ④
㉚
M16
X6
b
5 ②
③
㉘
㉖
X5
a
Y6
⑮
b
Y5
a
⑬
Y4
b
4 ④
a
YIII
⑲
② 035
①
M15
III ③
YII
① 025
③
⑰
II ④
b
a
Y1
M13
1 ②
Linie tragere
O8
RAMPA

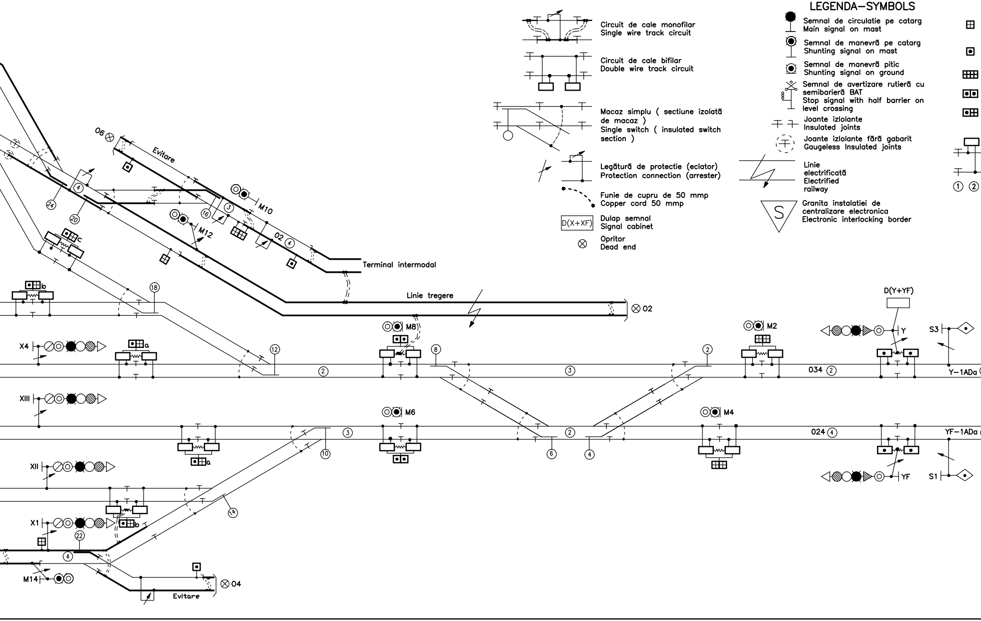
06
Evitare
M10
M12
02 ④
Terminal intermodal
Linie tregere
02
D(Y+YF)
M8
M2
Y
S3
X4
034 ②
Y–1ADa
XIII
M6
M4
024 ④
YF–1ADa
XII
YF
S1
X1
M14
Evitare
04
24
20
4
16
3
18
12
8
2
3
10
6
4
14
22
a
b
c
① ②

LEGENDA—SYMBOLS

Circuit de cale monofilar
Single wire track circuit

Circuit de cale bifilar
Double wire track circuit

Macaz simplu (sectiune izolată de macaz)
Single switch (insulated switch section)

Legătură de protectie (eclator)
Protection connection (arrester)

Funie de cupru de 50 mmp
Copper cord 50 mmp

D(X+XF) Dulap semnal
Signal cabinet

⊗ Opritor
Dead end

Semnal de circulatie pe catarg
Main signal on mast

Semnal de manevră pe catarg
Shunting signal on mast

Semnal de manevră pitic
Shunting signal on ground

Semnal de avertizare rutieră cu semibarieră BAT
Stop signal with half barrier on level crossing

Joante izlolante
Insulated joints

Joante izlolante fără gabarit
Gaugeless Insulated joints

Linie electrificată
Electrified railway

Granita instalatiei de centralizare electronica
Electronic interlocking border

Cutie aparataj pentru circuit de cale cap – receptie
Track circuit box – receiving end

Cutie aparataj pentru circuit de cale cap – alimentare
Track circuit box – supplying end

Cutie aparataj pentru circuite de cale – 2 capete receptie
Track circuit box – two receiving ends

Cutie aparataj pentru circuite de cale – 2 capete alimentare
Track circuit box – two supplying ends

Cutie aparataj pentru circuite de cale – 1 cap receptie, 1 cap alimentare
Track circuit box – receiving end– supplying end

Bobină de joantă
Joint coil

Secventa circuitului de cale
Track circuit sequence

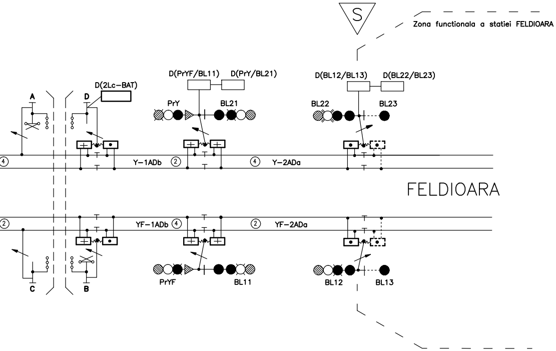
S
Zona functionala a statiei FELDIOARA
D(2Lc–BAT)
D(PrYF/BL11)
D(PrY/BL21)
D(BL12/BL13)
D(BL22/BL23)
A
D
PrY
BL21
BL22
BL23
4
Y–1ADb
2
4
Y–2ADa
FELDIOARA
2
YF–1ADb
4
2
YF–2ADa
C
B
PrYF
BL11
BL12
BL13

D					
C					
B					
A					
Indice Index	Data Date	Modificare Modification/Revision	Proiectant Designer	Aprobat Consultant Approved Consultant	Aprobat CFR Approved CFR

GUVERNUL ROMANIEI
ROMANIAN GOVERNMENT

PROIECT FINANȚAT DE UNIUNEA EUROPEANĂ
EUROPEAN UNION FINANCED PROJECT

CLIENT / CLIENT

C.N.C.F. "C.F.R." - S.A.

ITALFERR
GRUPPO FERROVIE DELLO STATO
Joint Venture leader

Scott Wilson

OBERMEYER
PLANEN + BERATEN GmbH

TECNIC
Consulting Engineers

CONSULTANT / CONSULTANT			Data Date	Semnătură Signature
Aprobat Approved	Şef proiect Project manager	R. Liuzza	12.2011	
Aprobat Approved	Coordonator Secțiune 1 Section 1 Coordinator	C. Gambelli	12.2011	
Verificat Checked	Expert Cheie Key Expert	P. Amodio	12.2011	

SUBCONTRACTANT / SUBCONTRACTOR

AREX COMPANY

Aprobat Approved	Responsabil Subconsultant Subconsultant Responsible	A. Stanciu - Dinulescu	12.2011	
Întocmit Elaborated	Proiectant Designer	Costeanu Dan	12.2011	

Reabilitarea liniei de cale ferata Braşov - Simeria, parte componentă a coridorului IV Pan European, pentru circulația trenurilor cu viteza maximă de 160 km/h,
Tronsonul : Braşov - Sighişoara
Rehabilitation of the railway line Braşov - Simeria, component Part of the IV Pan-European Corridor, for the trains circulation with maximum speed of 160 km/h,
Section : Braşov - Sighişoara

Proiect/Project
2004/RO/16/P/PA/003

Faza / Phase:
P.Th. / T.D.

Denumire desen / Drawing Title :

Statia / Station BOD
Plan bifilar de izolare
Track circuit plan

Codificare / Codification System	Scara / Scale Fără / No scale	LOT / LOT	Nr. / No 01 / 01

E A 5 1 | 0 1 | C | 0 5 | U X | S E | 0 0 | 5 | 2 | 0 0 3 | 1