NOTA: Acest desen nu constituie o obligatie de aplicare de către contractor.
El reprezintă doar un exemplu de circuit de cale utilizat la CFR si nu trebuie aplicat ca atare.

NOTE: It is not compulsory for the contractor to apply this drawing.
It is only an example of track circuit in use at CFR and shall not be applied as such.

Indice Index	Data Date	Modificare Modification/Revision	Proiectant Designer	Aprobat Consultant Approved Consultant	Aprobat CFR Approved CFR
D					
C					
B					
A					

GUVERNUL ROMANIEI
ROMANIAN GOVERNMENT

PROIECT FINANŢAT DE UNIUNEA EURO
EUROPEAN UNION FINANCED P

CLIENT / CLIENT

C.N.C.F. "C.F.R." - S.A.

ITALFERR
GRUPPO FERROVIE DELLO STATO
Joint Venture leader

Scott Wilson

OBERMEYER
PLANEN + BERATEN GmbH

TECNIC
Consulting Engineers

CONSULTANT / CONSULTANT

			Data Date	Semnătură Signature
Aprobat Approved	Şef proiect Project manager	R. Liuzza	12.2011	
Aprobat Approved	Coordonator Secţiune 1 Section 1 Coordinator	C. Gambelli	12.2011	
Verificat Checked	Expert Cheie Key Expert	P. Amodio	12.2011	

SUBCONTRACTANT / SUBCONTRACTOR

AREX COMPANY

Aprobat Approved	Responsabil Subconsultant Subconsultant Responsible	A. Stanciu - Dinulescu	12.2011	
Întocmit Elaborated	Proiectant Designer	Angelescu Sergiu	12.2011	

Reabilitarea liniei de cale ferata Brașov - Simeria, parte componentă a coridorului IV Pan European, pentru circulația trenurilor cu viteza maximă de 160 km/h,
Tronsonul : Brașov - Sighișoara
Rehabilitation of the railway line Brașov - Simeria, component Part of the IV Pan-European Corridor, for the trains circulation with maximum speed of 160 km/h,
Section : Brașov - Sighișoara

Proiect/Project
2004/RO/16/P/PA/003

Faza / Phase:
D.E. / D.D.

Denumire desen / Drawing Title :

Statia / Station FELDIOARA
Schema releelor de cale
Scheme for track circuits relay

Codificare / Codification System	Scara / Scale Fără / No scale	LOT / LOT	Nr. / No 01 / 05

EA51 01 E 07 BX SE 00 7 2 016 0

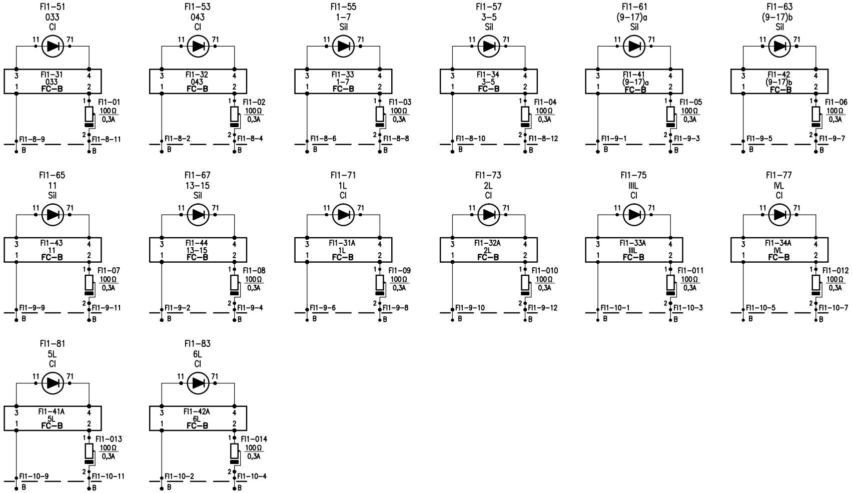
FI1-51
033
Cl
11
71
3
FI1-31
033
FC-B
4
1
2
FI1-01
100Ω
0,3A
FI1-8-9
FI1-8-11
B
FI1-53
043
Cl
FI1-32
043
FC-B
FI1-02
FI1-8-2
FI1-8-4
FI1-55
1-7
Sil
FI1-33
1-7
FC-B
FI1-03
FI1-8-6
FI1-8-8
FI1-57
3-5
Sil
FI1-34
3-5
FC-B
FI1-04
FI1-8-10
FI1-8-12
FI1-61
(9-17)a
Sil
FI1-41
(9-17)a
FC-B
FI1-05
FI1-9-1
FI1-9-3
FI1-63
(9-17)b
Sil
FI1-42
(9-17)b
FC-B
FI1-06
FI1-9-5
FI1-9-7
FI1-65
11
Sil
FI1-43
11
FC-B
FI1-07
FI1-9-9
FI1-9-11
FI1-67
13-15
Sil
FI1-44
13-15
FC-B
FI1-08
FI1-9-2
FI1-9-4
FI1-71
1L
Cl
FI1-31A
1L
FC-B
FI1-09
FI1-9-6
FI1-9-8
FI1-73
2L
Cl
FI1-32A
2L
FC-B
FI1-010
FI1-9-10
FI1-9-12
FI1-75
IIIL
Cl
FI1-33A
IIIL
FC-B
FI1-011
FI1-10-1
FI1-10-3
FI1-77
IVL
Cl
FI1-34A
IVL
FC-B
FI1-012
FI1-10-5
FI1-10-7
FI1-81
5L
Cl
FI1-41A
5L
FC-B
FI1-013
FI1-10-9
FI1-10-11
FI1-83
6L
Cl
FI1-42A
6L
FC-B
FI1-014
FI1-10-2
FI1-10-4

Statia: FELDIOARA

EA51 01 E 07 BX SE 007 2 016 0   02/05

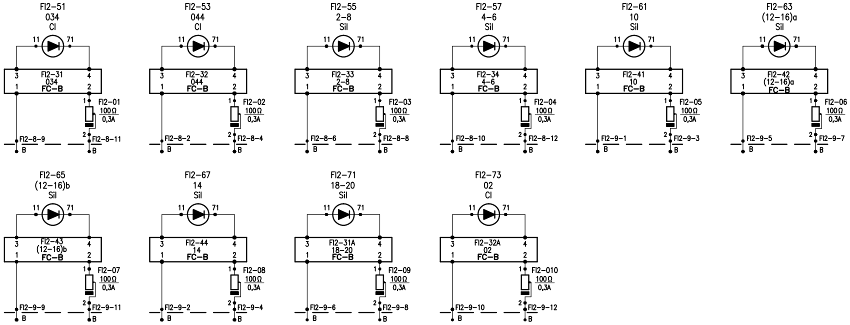
Fl2-51
034
Cl
11
71
3
Fl2-31
034
FC-B
4
1
2
1
Fl2-01
100Ω
0,3A
2
Fl2-8-9
B
Fl2-8-11
B
Fl2-53
044
Cl
11
71
3
Fl2-32
044
FC-B
4
1
2
1
Fl2-02
100Ω
0,3A
2
Fl2-8-2
B
Fl2-8-4
B
Fl2-55
2-8
Sil
11
71
3
Fl2-33
2-8
FC-B
4
1
2
1
Fl2-03
100Ω
0,3A
2
Fl2-8-6
B
Fl2-8-8
B
Fl2-57
4-6
Sil
11
71
3
Fl2-34
4-6
FC-B
4
1
2
1
Fl2-04
100Ω
0,3A
2
Fl2-8-10
B
Fl2-8-12
B
Fl2-61
10
Sil
11
71
3
Fl2-41
10
FC-B
4
1
2
1
Fl2-05
100Ω
0,3A
2
Fl2-9-1
B
Fl2-9-3
B
Fl2-63
(12-16)a
Sil
11
71
3
Fl2-42
(12-16)a
FC-B
4
1
2
1
Fl2-06
100Ω
0,3A
2
Fl2-9-5
B
Fl2-9-7
B
Fl2-65
(12-16)b
Sil
11
71
3
Fl2-43
(12-16)b
FC-B
4
1
2
1
Fl2-07
100Ω
0,3A
2
Fl2-9-9
B
Fl2-9-11
B
Fl2-67
14
Sil
11
71
3
Fl2-44
14
FC-B
4
1
2
1
Fl2-08
100Ω
0,3A
2
Fl2-9-2
B
Fl2-9-4
B
Fl2-71
18-20
Sil
11
71
3
Fl2-31A
18-20
FC-B
4
1
2
1
Fl2-09
100Ω
0,3A
2
Fl2-9-6
B
Fl2-9-8
B
Fl2-73
02
Cl
11
71
3
Fl2-32A
02
FC-B
4
1
2
1
Fl2-010
100Ω
0,3A
2
Fl2-9-10
B
Fl2-9-12
B

Statia: Feldioara

EA51 01 E 07 BX SE 007 2 016 0   03/05

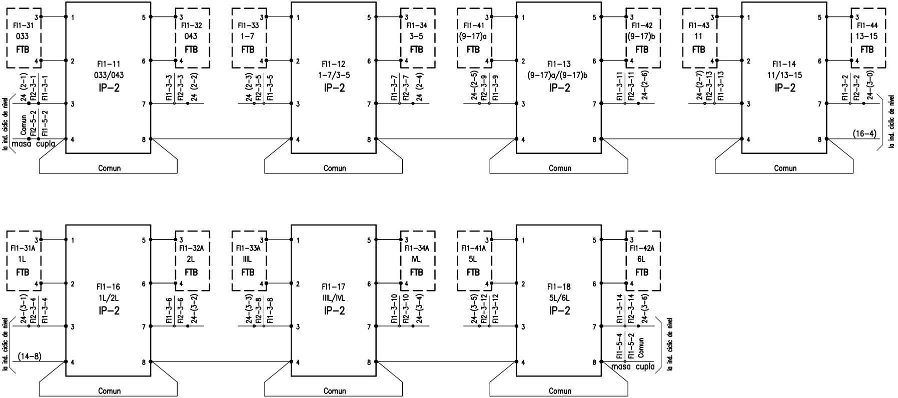
Fl1-31
033
FTB
Fl1-32
043
FTB
Fl1-11
033/043
IP-2
24 (2-1)
Fl2-3-1
Fl1-3-1
Comun
Fl2-5-2
Fl1-5-2
masa cupla
la ind. ciclic de nivel
Fl1-3-3
Fl2-3-3
24 (2-2)
Comun
Fl1-33
1-7
FTB
Fl1-34
3-5
FTB
Fl1-12
1-7/3-5
IP-2
24 (2-3)
Fl2-3-5
Fl1-3-5
Fl1-3-7
Fl2-3-7
24 (2-4)
Comun
Fl1-41
(9-17)a
FTB
Fl1-42
(9-17)b
FTB
Fl1-13
(9-17)a/(9-17)b
IP-2
24-(2-5)
Fl2-3-9
Fl1-3-9
Fl1-3-11
Fl2-3-11
24-(2-6)
Comun
Fl1-43
11
FTB
Fl1-44
13-15
FTB
Fl1-14
11/13-15
IP-2
24-(2-7)
Fl2-3-13
Fl1-3-13
Fl1-3-2
Fl2-3-2
24-(3-0)
(16-4)
la ind. ciclic de nivel
Comun
Fl1-31A
1L
FTB
Fl1-32A
2L
FTB
Fl1-16
1L/2L
IP-2
24-(3-1)
Fl2-3-4
Fl1-3-4
(14-8)
la ind. ciclic de nivel
Fl1-3-6
Fl2-3-6
24-(3-2)
Comun
Fl1-33A
IIIL
FTB
Fl1-34A
IVL
FTB
Fl1-17
IIIL/IVL
IP-2
24-(3-3)
Fl2-3-8
Fl1-3-8
Fl1-3-10
Fl2-3-10
24-(3-4)
Comun
Fl1-41A
5L
FTB
Fl1-42A
6L
FTB
Fl1-18
5L/6L
IP-2
24-(3-5)
Fl2-3-12
Fl1-3-12
Fl1-3-14
Fl2-3-14
24-(3-6)
Fl1-5-4
Fl1-5-2
Comun
masa cupla
la ind. ciclic de nivel
Comun
1
2
3
4
5
6
7
8

Statia: FELDIOARA

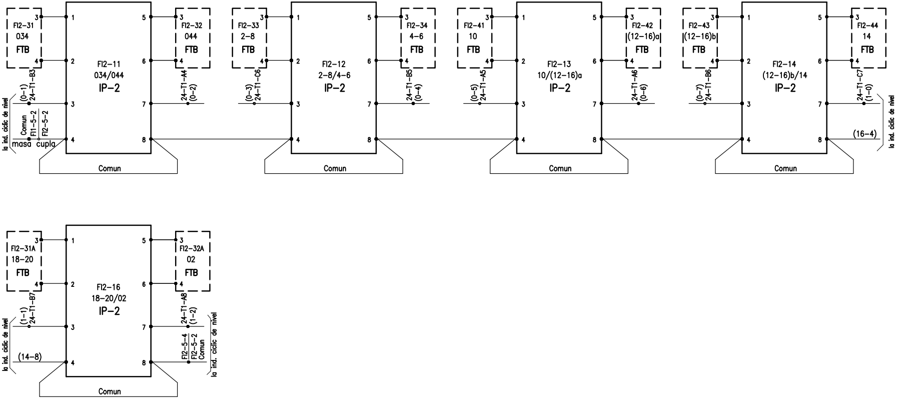
FI2-31
034
FTB
FI2-32
044
FTB
FI2-11
034/044
IP-2
24-T1-B3
(0-1)
24-T1-A4
(0-2)
la ind. ciclic de nivel
Comun
FI1-5-2
FI2-5-2
masa
cupla
Comun
FI2-33
2-8
FTB
FI2-34
4-6
FTB
FI2-12
2-8/4-6
IP-2
(0-3)
24-T1-C6
24-T1-B5
(0-4)
Comun
FI2-41
10
FTB
FI2-42
(12-16)a
FTB
FI2-13
10/(12-16)a
IP-2
(0-5)
24-T1-A5
24-T1-A6
(0-6)
Comun
FI2-43
(12-16)b
FTB
FI2-44
14
FTB
FI2-14
(12-16)b/14
IP-2
(0-7)
24-T1-B6
24-T1-C7
(1-0)
(16-4)
la ind. ciclic de nivel
Comun
FI2-31A
18-20
FTB
FI2-32A
02
FTB
FI2-16
18-20/02
IP-2
(1-1)
24-T1-B7
24-T1-A8
(1-2)
la ind. ciclic de nivel
(14-8)
FI2-5-4
FI2-5-2
Comun
la ind. ciclic de nivel
Comun
1
2
3
4
5
6
7
8

Statia: Feldioara

EA51 01 E 07 BX SE 007 2 016 0