NOTA: Acest desen nu constituie o obligatie de aplicare de către contractor.
El reprezintă doar un exemplu de circuit de cale utilizat la CFR si nu trebuie aplicat ca atare.

NOTE: It is not compulsory for the contractor to apply this drawing.
It is only an example of track circuit in use at CFR and shall not be applied as such.

D					
C					
B					
A					
Indice Index	Data Date	Modificare Modification/Revision	Proiectant Designer	Aprobat Consultant Approved Consultant	Aprobat CFR Approved CFR

GUVERNUL ROMANIEI
ROMANIAN GOVERNMENT

PROIECT FINANȚAT DE UNIUNEA EURO
EUROPEAN UNION FINANCED PR

CLIENT / CLIENT

C.N.C.F. "C.F.R." - S.A.

ITALFERR
GRUPPO FERROVIE DELLO STATO
Joint Venture leader

Scott Wilson

OBERMEYER
PLANEN + BERATEN GmbH

TECNIC
Consulting Engineers

CONSULTANT / CONSULTANT

			Data Date	Semnătură Signature
Aprobat Approved	Şef proiect Project manager	R. Liuzza	12.2011	
Aprobat Approved	Coordonator Secțiune 1 Section 1 Coordinator	C. Gambelli	12.2011	
Verificat Checked	Expert Cheie Key Expert	P. Amodio	12.2011	

SUBCONTRACTANT / SUBCONTRACTOR

AREX COMPANY

Aprobat Approved	Responsabil Subconsultant Subconsultant Responsible	A. Stanciu - Dinulescu	12.2011	
Întocmit Elaborated	Proiectant Designer	Angelescu Sergiu	12.2011	

Reabilitarea liniei de cale ferata Braşov - Simeria, parte componentă a coridorului IV Pan European, pentru circulația trenurilor cu viteza maximă de 160 km/h,
Tronsonul : Braşov - Sighişoara
Rehabilitation of the railway line Braşov - Simeria, component Part of the IV Pan-European Corridor, for the trains circulation with maximum speed of 160 km/h,
Section : Braşov - Sighişoara

Proiect/Project
2004/RO/16/P/PA/003

Faza / Phase:
D.E. / D.D.

Denumire desen / Drawing Title :

Statia / Station FELDIOARA
Schema de decodificare a circuitelor de cale
Decoder scheme for track circuits

Codificare / Codification System	Scara / Scale Fără / No scale	LOT / LOT	Nr. / No 01 / 04

EA51 01 E 07 BX SE 00 7 2 017 0

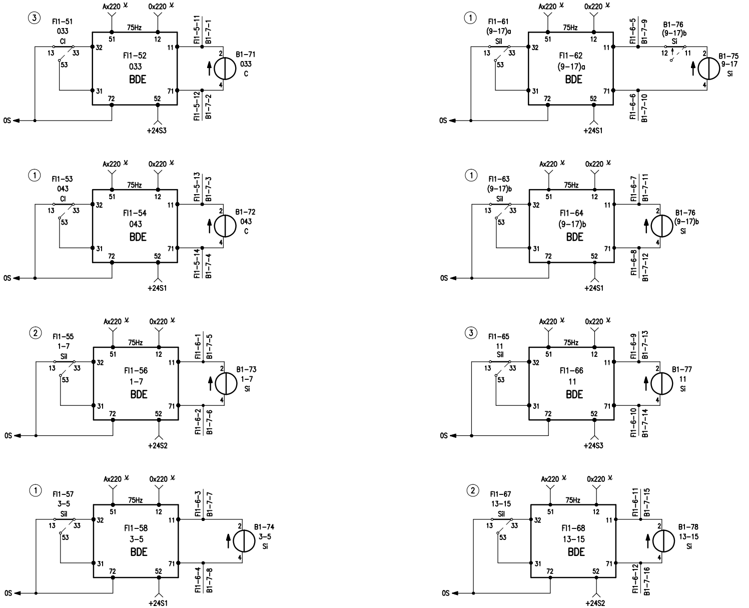
③
Fl1-51
033
Cl
13
33
53
Ax220 ⊻
0x220 ⊻
75Hz
51
12
32
11
31
71
72
52
Fl1-52
033
BDE
Fl1-5-11
B1-7-1
Fl1-5-12
B1-7-2
B1-71
033
C
2
4
0S
+24S3
①
Fl1-61
(9-17)a
Sil
Fl1-62
(9-17)a
BDE
Fl1-6-5
B1-7-9
B1-76
(9-17)b
Si
12
11
B1-75
9-17
Si
Fl1-6-6
B1-7-10
+24S1
①
Fl1-53
043
Cl
Fl1-54
043
BDE
Fl1-5-13
B1-7-3
Fl1-5-14
B1-7-4
B1-72
043
C
+24S1
①
Fl1-63
(9-17)b
Sil
Fl1-64
(9-17)b
BDE
Fl1-6-7
B1-7-11
Fl1-6-8
B1-7-12
B1-76
(9-17)b
Si
+24S1
②
Fl1-55
1-7
Sil
Fl1-56
1-7
BDE
Fl1-6-1
B1-7-5
Fl1-6-2
B1-7-6
B1-73
1-7
Si
+24S2
③
Fl1-65
11
Sil
Fl1-66
11
BDE
Fl1-6-9
B1-7-13
Fl1-6-10
B1-7-14
B1-77
11
Si
+24S3
①
Fl1-57
3-5
Sil
Fl1-58
3-5
BDE
Fl1-6-3
B1-7-7
Fl1-6-4
B1-7-8
B1-74
3-5
Si
+24S1
②
Fl1-67
13-15
Sil
Fl1-68
13-15
BDE
Fl1-6-11
B1-7-15
Fl1-6-12
B1-7-16
B1-78
13-15
Si
+24S2

Statia: FELDIOARA

EA51 01 E 07 BX SE 007 2 017 0 02/04

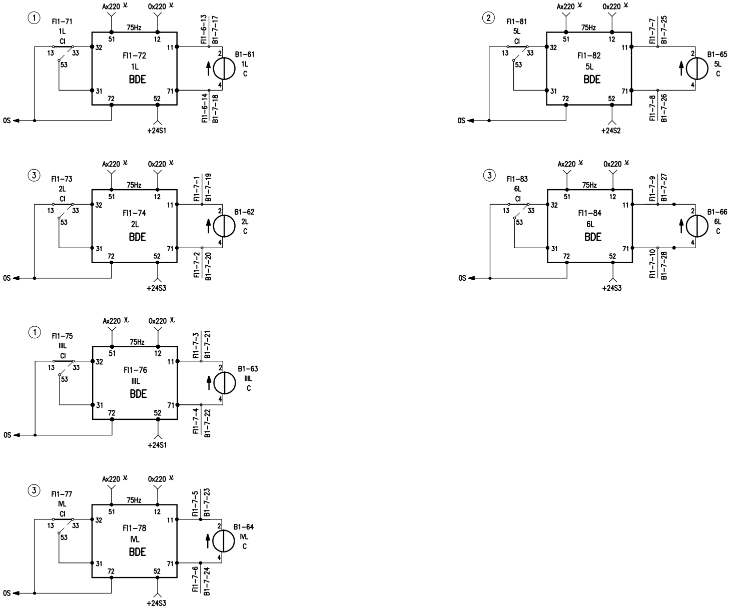
①
FI1−71
1L
CI
13
33
53
Ax220
0x220
75Hz
51
12
32
11
31
71
72
52
FI1−72
1L
BDE
FI1−6−13
B1−7−17
FI1−6−14
B1−7−18
2
4
B1−61
1L
C
0S
+24S1
②
FI1−81
5L
CI
FI1−82
5L
BDE
FI1−7−7
B1−7−25
FI1−7−8
B1−7−26
B1−65
5L
C
+24S2
③
FI1−73
2L
CI
FI1−74
2L
BDE
FI1−7−1
B1−7−19
FI1−7−2
B1−7−20
B1−62
2L
C
+24S3
③
FI1−83
6L
CI
FI1−84
6L
BDE
FI1−7−9
B1−7−27
FI1−7−10
B1−7−28
B1−66
6L
C
+24S3
①
FI1−75
IIIL
CI
FI1−76
IIIL
BDE
FI1−7−3
B1−7−21
FI1−7−4
B1−7−22
B1−63
IIIL
C
+24S1
③
FI1−77
IVL
CI
FI1−78
IVL
BDE
FI1−7−5
B1−7−23
FI1−7−6
B1−7−24
B1−64
IVL
C
+24S3

Statia: FELDIOARA

EA51 01 E 07 BX SE 007 2 017 0 03/04

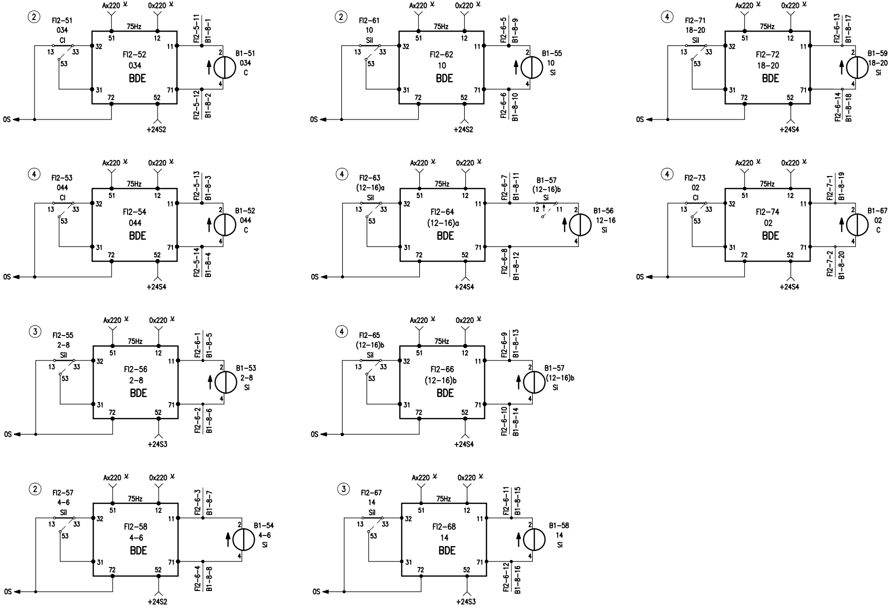
②
FI2-51
034
CI
Ax220
0x220
75Hz
FI2-52
034
BDE
FI2-5-11
B1-8-1
FI2-5-12
B1-8-2
B1-51
034
C
+24S2
OS
②
FI2-61
10
Sil
Ax220
0x220
75Hz
FI2-62
10
BDE
FI2-6-5
B1-8-9
FI2-6-6
B1-8-10
B1-55
10
Si
+24S2
OS
④
FI2-71
18-20
Sil
Ax220
0x220
75Hz
FI2-72
18-20
BDE
FI2-6-13
B1-8-17
FI2-6-14
B1-8-18
B1-59
18-20
Si
+24S4
OS
④
FI2-53
044
CI
Ax220
0x220
75Hz
FI2-54
044
BDE
FI2-5-13
B1-8-3
FI2-5-14
B1-8-4
B1-52
044
C
+24S4
OS
④
FI2-63
(12-16)a
Sil
Ax220
0x220
75Hz
FI2-64
(12-16)a
BDE
FI2-6-7
B1-8-11
B1-57
(12-16)b
Si
FI2-6-8
B1-8-12
B1-56
12-16
Si
+24S4
OS
④
FI2-73
02
CI
Ax220
0x220
75Hz
FI2-74
02
BDE
FI2-7-1
B1-8-19
FI2-7-2
B1-8-20
B1-67
02
C
+24S4
OS
③
FI2-55
2-8
Sil
Ax220
0x220
75Hz
FI2-56
2-8
BDE
FI2-6-1
B1-8-5
FI2-6-2
B1-8-6
B1-53
2-8
Si
+24S3
OS
④
FI2-65
(12-16)b
Sil
Ax220
0x220
75Hz
FI2-66
(12-16)b
BDE
FI2-6-9
B1-8-13
FI2-6-10
B1-8-14
B1-57
(12-16)b
Si
+24S4
OS
②
FI2-57
4-6
Sil
Ax220
0x220
75Hz
FI2-58
4-6
BDE
FI2-6-3
B1-8-7
FI2-6-4
B1-8-8
B1-54
4-6
Si
+24S2
OS
③
FI2-67
14
Sil
Ax220
0x220
75Hz
FI2-68
14
BDE
FI2-6-11
B1-8-15
FI2-6-12
B1-8-16
B1-58
14
Si
+24S3
OS
13
33
53
32
31
51
12
11
71
72
52
2
4

Statia: Feldioara