LEGENDA
SYMBOLS

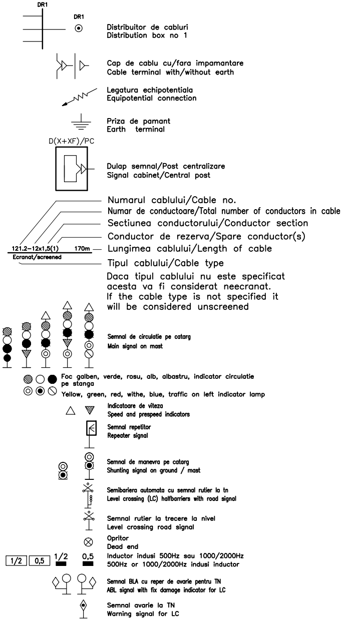
DR1
DR1
D(X+XF)/PC
121.2–12x1,5(1)
170m
Ecranat/screened
1/2
0,5
1/2
0,5

Distribuitor de cabluri
Distribution box no 1

Cap de cablu cu/fara impamantare
Cable terminal with/without earth

Legatura echipotentiala
Equipotential connection

Priza de pamant
Earth terminal

Dulap semnal/Post centralizare
Signal cabinet/Central post

Numarul cablului/Cable no.
Numar de conductoare/Total number of conductors in cable
Sectiunea conductorului/Conductor section
Conductor de rezerva/Spare conductor(s)
Lungimea cablului/Length of cable
Tipul cablului/Cable type

Daca tipul cablului nu este specificat acesta va fi considerat neecranat.
If the cable type is not specified it will be considered unscreened

Semnal de circulatie pe catarg
Main signal on mast

Foc galben, verde, rosu, alb, albastru, indicator circulatie pe stanga
Yellow, green, red, withe, blue, traffic on left indicator lamp

Indicatoare de viteza
Speed and prespeed indicators

Semnal repetitor
Repeater signal

Semnal de manevra pe catarg
Shunting signal on ground / mast

Semibariera automata cu semnal rutier la tn
Level crossing (LC) halfbarriers with road signal

Semnal rutier la trecere la nivel
Level crossing road signal

Opritor
Dead end

Inductor indusi 500Hz sau 1000/2000Hz
500Hz or 1000/2000Hz indusi inductor

Semnal BLA cu reper de avarie pentru TN
ABL signal with fix damage indicator for LC

Semnal avarie la TN
Warning signal for LC

D					
C					
B					
A					
Indice Index	Data Date	Modificare Modification/Revision	Proiectant Designer	Aprobat Consultant Approved Consultant	Aprobat CFR Approved CFR

GUVERNUL ROMANIEI
ROMANIAN GOVERNMENT

PROIECT FINANŢAT DE UNIUNEA EUROPEANĂ
EUROPEAN UNION FINANCED PROJECT

C.N.C.F. "C.F.R." - S.A.

CLIENT / CLIENT

CONSULTANT / CONSULTANT

			Data Date	Semnătură Signature
Aprobat Approved	Şef proiect Project manager	R. Liuzza	02.2012	
Aprobat Approved	Coordonator Secţiune 1 Section 1 Coordinator	C. Gambelli	02.2012	
Verificat Checked	Expert Cheie Key Expert	P. Amodio	02.2012	

SUBCONTRACTANT / SUBCONTRACTOR

Aprobat Approved	Responsabil Subconsultant Subconsultant Responsible	A. Stanciu - Dinulescu	02.2012	
Întocmit Elaborated	Proiectant Designer	M. Holbură	02.2012	Holen

Reabilitarea liniei de cale ferata Braşov - Simeria, parte componentă a coridorului IV Pan European, pentru circulaţia trenurilor cu viteza maximă de 160 km/h,
Tronsonul : Braşov - Sighişoara
Rehabilitation of the railway line Braşov - Simeria, component Part of the IV Pan-European Corridor, for the trains circulation with maximum speed of 160 km/h,
Section : Braşov - Sighişoara

Proiect/Project
2004/RO/16/P/PA/003

Faza / Phase:
P.Th. / T.D.

Denumire desen / Drawing Title :

Statia / Station FELDIOARA
Plan cablaj retele cabluri dulapuri de semnale
Cable lay-out for signal cabinet

Codificare / Codification System	Scara / Scale Fără / No scale	LOT / LOT	Nr. / No 01 / 03

EA51 01 C 07 UX SE 00 7 2 012 2

420x297=0.13mp

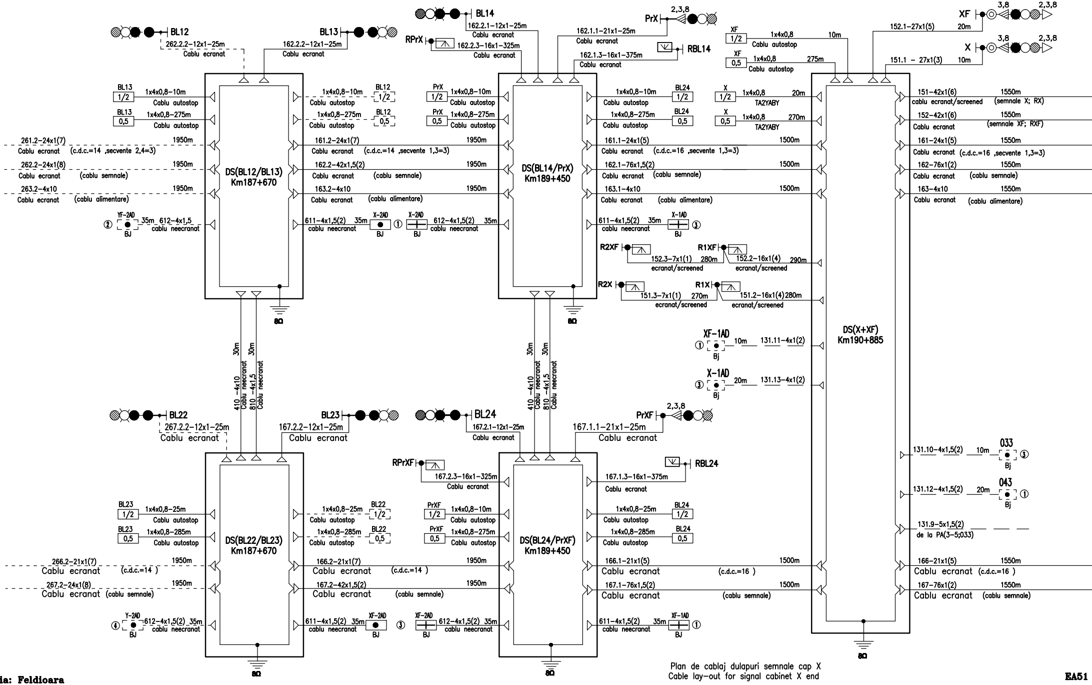
BL12
262.2.2–12x1–25m
Cablu ecranat
BL13
162.2.2–12x1–25m
Cablu ecranat
BL14
162.2.1–12x1–25m
Cablu ecranat
RPrX
162.2.3–16x1–325m
Cablu ecranat
PrX
2,3,8
162.1.1–21x1–25m
Cablu ecranat
RBL14
162.1.3–16x1–375m
Cablu ecranat
XF
1/2
1x4x0,8
Cablu autostop
10m
0,5
275m
152.1–27x1(5)
20m
151.1 – 27x1(3)
10m
X
3,8
DS(BL12/BL13)
Km187+670
DS(BL14/PrX)
Km189+450
DS(X+XF)
Km190+885
DS(BL22/BL23)
Km187+670
DS(BL24/PrXF)
Km189+450
1x4x0,8–10m
1x4x0,8–275m
261.2–24x1(7)
Cablu ecranat (c.d.c.=14 ,secvente 2,4=3)
1950m
262.2–24x1(8)
Cablu ecranat (cablu semnale)
263.2–4x10
Cablu ecranat (cablu alimentare)
YF-2AD
612–4x1,5
cablu neecranat
35m
BJ
161.2–24x1(7)
Cablu ecranat (c.d.c.=14 ,secvente 1,3=3)
162.2–42x1,5(2)
163.2–4x10
611–4x1,5(2)
X-2AD
612–4x1,5(2)
161.1–24x1(5)
Cablu ecranat (c.d.c.=16 ,secvente 1,3=3)
1500m
162.1–76x1,5(2)
163.1–4x10
X-1AD
R2XF
152.3–7x1(1) 280m
ecranat/screened
R1XF
152.2–16x1(4)
290m
R2X
151.3–7x1(1) 270m
R1X
151.2–16x1(4) 280m
XF-1AD
10m 131.11–4x1(2)
Bj
X-1AD
20m 131.13–4x1(2)
TA2YABY
20m
270m
151–42x1(6)
1550m
cablu ecranat/screened (semnale X; RX)
152–42x1(6)
(semnale XF; RXF)
161–24x1(5)
Cablu ecranat (c.d.c.=16 ,secvente 1,3=3)
162–76x1(2)
163–4x10
8Ω
30m
410 –4x10 Cablu neecranat
810 –4x1,5 Cablu neecranat
BL22
267.2.2–12x1–25m
Cablu ecranat
BL23
167.2.2–12x1–25m
Cablu ecranat
BL24
167.2.1–12x1–25m
Cablu ecranat
PrXF
167.1.1–21x1–25m
Cablu ecranat
RPrXF
167.2.3–16x1–325m
RBL24
167.1.3–16x1–375m
033
131.10–4x1,5(2) 10m
043
131.12–4x1,5(2) 20m
131.9–5x1,5(2)
de la PA(3–5;033)
1x4x0,8–25m
1x4x0,8–285m
266.2–21x1(7)
Cablu ecranat (c.d.c.=14)
267.2–24x1(8)
Cablu ecranat (cablu semnale)
Y-2AD
166.2–21x1(7)
167.2–42x1,5(2)
XF-2AD
166.1–21x1(5)
Cablu ecranat (c.d.c.=16)
167.1–76x1,5(2)
XF-1AD
166–21x1(5)
167–76x1(2)
①
②
③
④

Statia: Feldioara

Plan de cablaj dulapuri semnale cap X
Cable lay-out for signal cabinet X end

EA51

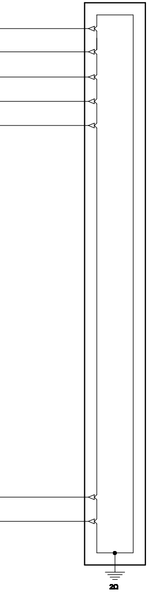

01 C 07 UX SE 007 2 012 2 02/03

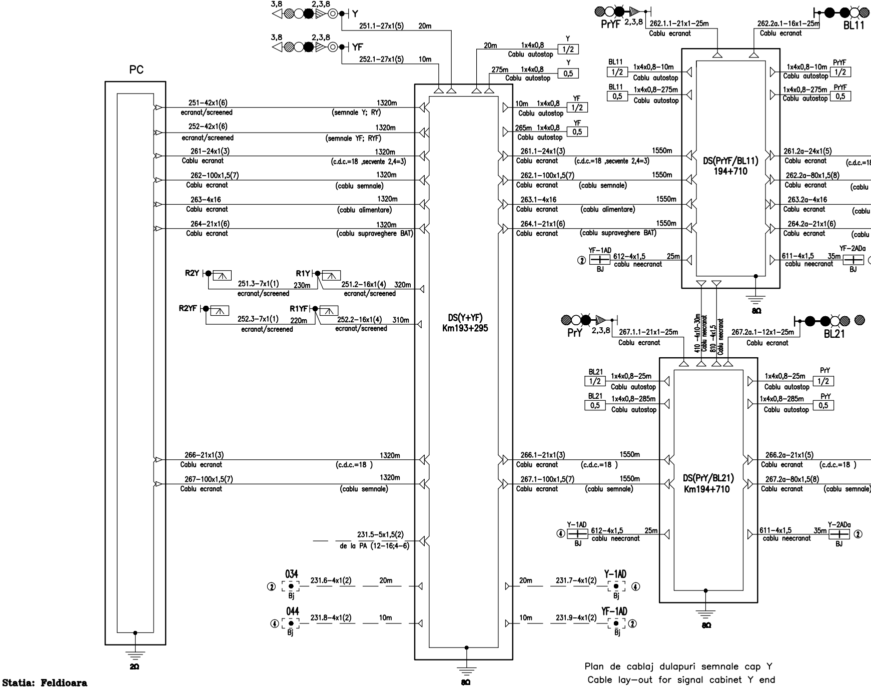
3,8
2,3,8
Y
251.1–27x1(5)
20m
YF
252.1–27x1(5)
10m
20m
1x4x0,8
Cablu autostop
1/2
275m
0,5
PC
251–42x1(6)
ecranat/screened
1320m
(semnale Y; RY)
252–42x1(6)
(semnale YF; RYF)
261–24x1(3)
Cablu ecranat
(c.d.c.=18 ,secvente 2,4=3)
262–100x1,5(7)
(cablu semnale)
263–4x16
(cablu alimentare)
264–21x1(6)
(cablu supraveghere BAT)
R2Y
R1Y
251.3–7x1(1)
230m
251.2–16x1(4)
320m
R2YF
R1YF
252.3–7x1(1)
220m
252.2–16x1(4)
310m
DS(Y+YF)
Km193+295
266–21x1(3)
(c.d.c.=18)
267–100x1,5(7)
231.5–5x1,5(2)
de la PA (12–16;4–6)
034
231.6–4x1(2)
Bj
044
231.8–4x1(2)
2Ω
8Ω
10m
265m
261.1–24x1(3)
1550m
262.1–100x1,5(7)
263.1–4x16
264.1–21x1(6)
266.1–21x1(3)
267.1–100x1,5(7)
231.7–4x1(2)
Y–1AD
231.9–4x1(2)
YF–1AD
PrYF
262.1.1–21x1–25m
262.2a.1–16x1–25m
BL11
1x4x0,8–10m
1x4x0,8–275m
DS(PrYF/BL11)
194+710
261.2a–24x1(5)
262.2a–80x1,5(8)
263.2a–4x16
264.2a–21x1(6)
612–4x1,5
25m
cablu neecranat
BJ
611–4x1,5
35m
YF–2ADa
410 –4x10–30m
Cablu neecranat
810 –4x1,5
Cablu neecranat
PrY
267.1.1–21x1–25m
267.2a.1–12x1–25m
BL21
1x4x0,8–25m
1x4x0,8–285m
DS(PrY/BL21)
Km194+710
266.2a–21x1(5)
267.2a–80x1,5(8)
Y–2ADa

Plan de cablaj dulapuri semnale cap Y
Cable lay–out for signal cabinet Y end

Statia: Feldioara

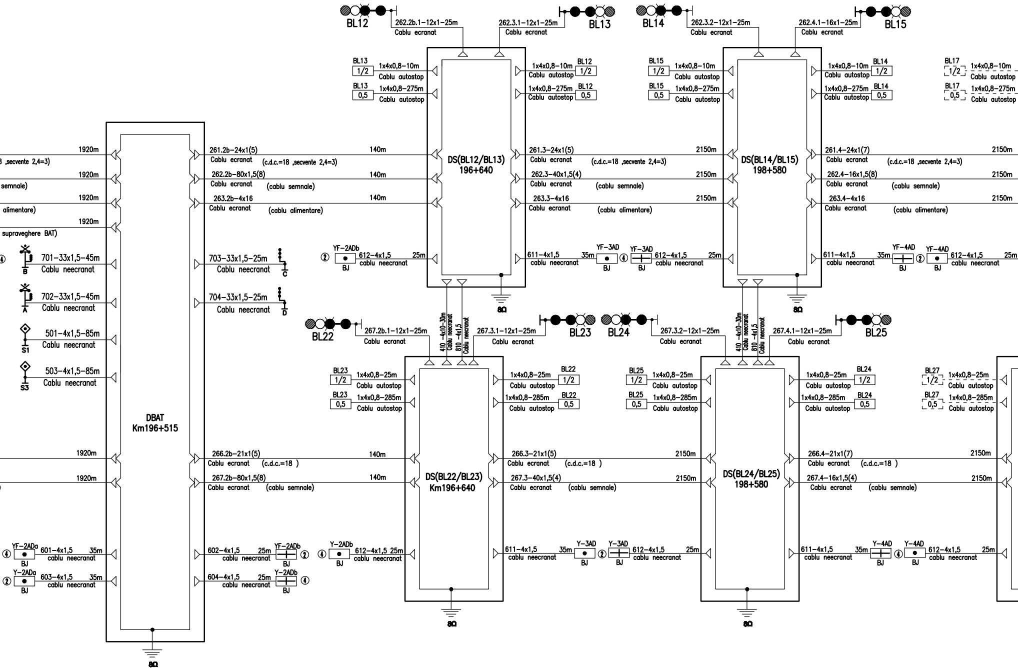
BL12
262.2b.1–12x1–25m
Cablu ecranat
262.3.1–12x1–25m
Cablu ecranat
BL13
BL14
262.3.2–12x1–25m
Cablu ecranat
262.4.1–16x1–25m
Cablu ecranat
BL15
BL13 1/2 1x4x0,8–10m Cablu autostop
BL13 0,5 1x4x0,8–275m Cablu autostop
1x4x0,8–10m Cablu autostop BL12 1/2
1x4x0,8–275m Cablu autostop BL12 0,5
BL15 1/2 1x4x0,8–10m Cablu autostop
BL15 0,5 1x4x0,8–275m Cablu autostop
1x4x0,8–10m Cablu autostop BL14 1/2
1x4x0,8–275m Cablu autostop BL14 0,5
BL17 1/2 1x4x0,8–10m Cablu autostop
BL17 0,5 1x4x0,8–275m Cablu autostop
1920m
3 ,secvente 2,4=3)
1920m
semnale)
1920m
alimentare)
1920m
supraveghere BAT)
④ B 701–33x1,5–45m Cablu neecranat
A 702–33x1,5–45m Cablu neecranat
S1 501–4x1,5–85m Cablu neecranat
S3 503–4x1,5–85m Cablu neecranat
DBAT
Km196+515
261.2b–24x1(5) Cablu ecranat (c.d.c.=18 ,secvente 2,4=3) 140m
262.2b–80x1,5(8) Cablu ecranat (cablu semnale) 140m
263.2b–4x16 Cablu ecranat (cablu alimentare) 140m
703–33x1,5–25m Cablu neecranat C
704–33x1,5–25m Cablu neecranat D
DS(BL12/BL13)
196+640
261.3–24x1(5) Cablu ecranat (c.d.c.=18 ,secvente 2,4=3) 2150m
262.3–40x1,5(4) Cablu ecranat (cablu semnale) 2150m
263.3–4x16 Cablu ecranat (cablu alimentare) 2150m
DS(BL14/BL15)
198+580
261.4–24x1(7) Cablu ecranat (c.d.c.=18 ,secvente 2,4=3) 2150m
262.4–16x1,5(8) Cablu ecranat (cablu semnale) 2150m
263.4–4x16 Cablu ecranat (cablu alimentare) 2150m
② YF–2ADb BJ 612–4x1,5 cablu neecranat 25m
611–4x1,5 cablu neecranat 35m YF–3AD BJ ④
YF–3AD BJ 612–4x1,5 cablu neecranat 25m
611–4x1,5 cablu neecranat 35m YF–4AD BJ ②
YF–4AD BJ 612–4x1,5 cablu neecranat 25m
8Ω
8Ω
410 –4x10–30m Cablu neecranat
810 –4x1,5 Cablu neecranat
410 –4x10–30m Cablu neecranat
810 –4x1,5 Cablu neecranat
BL22
267.2b.1–12x1–25m
Cablu ecranat
267.3.1–12x1–25m
Cablu ecranat
BL23
BL24
267.3.2–12x1–25m
Cablu ecranat
267.4.1–12x1–25m
Cablu ecranat
BL25
BL23 1/2 1x4x0,8–25m Cablu autostop
BL23 0,5 1x4x0,8–285m Cablu autostop
1x4x0,8–25m Cablu autostop BL22 1/2
1x4x0,8–285m Cablu autostop BL22 0,5
BL25 1/2 1x4x0,8–25m Cablu autostop
BL25 0,5 1x4x0,8–285m Cablu autostop
1x4x0,8–25m Cablu autostop BL24 1/2
1x4x0,8–285m Cablu autostop BL24 0,5
BL27 1/2 1x4x0,8–25m Cablu autostop
BL27 0,5 1x4x0,8–285m Cablu autostop
1920m
1920m
266.2b–21x1(5) Cablu ecranat (c.d.c.=18) 140m
267.2b–80x1,5(8) Cablu ecranat (cablu semnale) 140m
DS(BL22/BL23)
Km196+640
266.3–21x1(5) Cablu ecranat (c.d.c.=18) 2150m
267.3–40x1,5(4) Cablu ecranat (cablu semnale) 2150m
DS(BL24/BL25)
198+580
266.4–21x1(7) Cablu ecranat (c.d.c.=18) 2150m
267.4–16x1,5(4) Cablu ecranat (cablu semnale) 2150m
④ YF–2ADa BJ 601–4x1,5 cablu neecranat 35m
② Y–2ADa BJ 603–4x1,5 cablu neecranat 35m
602–4x1,5 cablu neecranat 25m YF–2ADb BJ ②
604–4x1,5 cablu neecranat 25m Y–2ADb BJ ④
④ Y–2ADb BJ 612–4x1,5 cablu neecranat 25m
611–4x1,5 cablu neecranat 35m Y–3AD BJ ②
Y–3AD BJ 612–4x1,5 cablu neecranat 25m
611–4x1,5 cablu neecranat 35m Y–4AD BJ ④
Y–4AD BJ 612–4x1,5 cablu neecranat 25m
8Ω
8Ω
8Ω

420x297=0.13mp

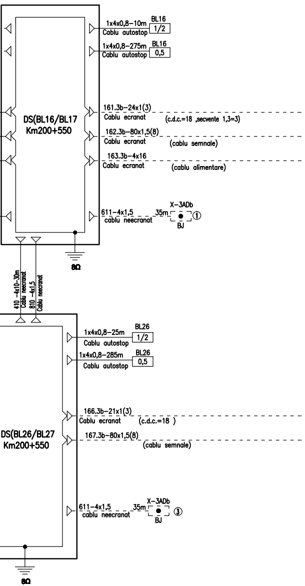
1x4x0,8–10m
Cablu autostop
BL16
1/2
1x4x0,8–275m
Cablu autostop
BL16
0,5
DS(BL16/BL17
Km200+550
161.3b–24x1(3)
Cablu ecranat
(c.d.c.=18 ,secvente 1,3=3)
162.3b–80x1,5(8)
Cablu ecranat
(cablu semnale)
163.3b–4x16
Cablu ecranat
(cablu alimentare)
611–4x1,5
cablu neecranat
35m
X–3ADb
BJ
①
8Ω
410 –4x10–30m
Cablu neecranat
810 –4x1,5
Cablu neecranat
1x4x0,8–25m
Cablu autostop
BL26
1/2
1x4x0,8–285m
Cablu autostop
BL26
0,5
DS(BL26/BL27
Km200+550
166.3b–21x1(3)
Cablu ecranat
(c.d.c.=18)
167.3b–80x1,5(8)
(cablu semnale)
611–4x1,5
cablu neecranat
35m
X–3ADb
BJ
③
8Ω

EA51 01 C 07 UX SE 007 2 012 2 03/03