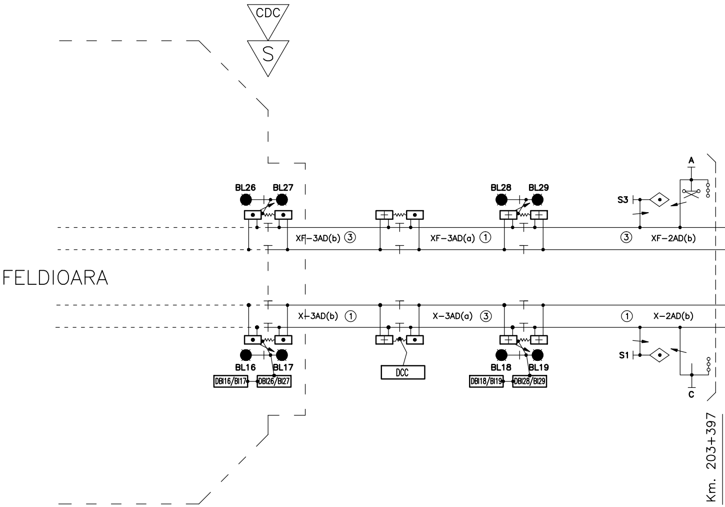
CDC
S
FELDIOARA
BL26
BL27
BL28
BL29
A
S3
XF−3AD(b) ③
XF−3AD(a) ①
③ XF−2AD(b)
X−3AD(b) ①
X−3AD(a) ③
① X−2AD(b)
S1
BL16
BL17
BL18
BL19
DCC
C
DBI16/BI17
DBI26/BI27
DBI18/BI19
DBI28/BI29
Km. 203+397

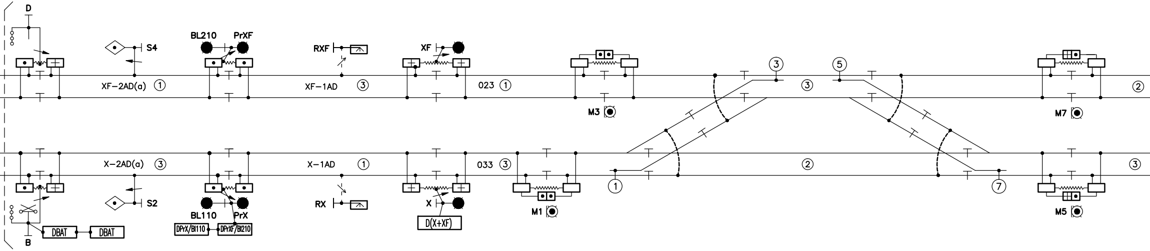
D
S4
BL210
PrXF
RXF
XF
XF–2AD(a) ①
XF–1AD ③
023 ①
③
⑤
③
②
M3
M7
X–2AD(a) ③
X–1AD ①
033 ③
②
③
①
⑦
S2
BL110
PrX
RX
X
M1
M5
B
DBAT
DBAT
DPrX/Bl110
DPrXF/Bl210
D(X+XF)

APATA

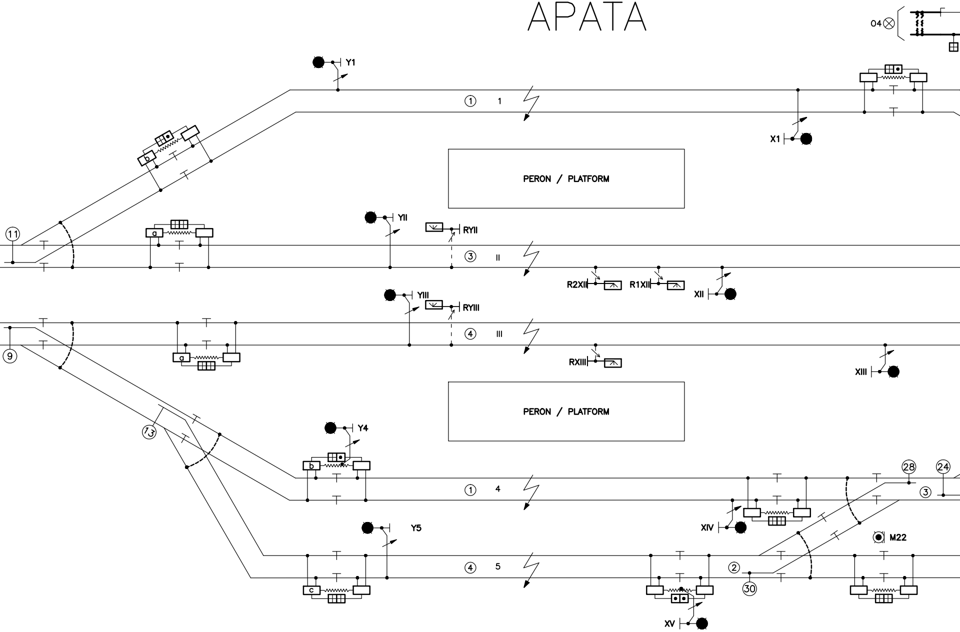

O4
Y1
① 1
X1
PERON / PLATFORM
YII
RYII
⑪
a
③ II
R2XII
R1XII
XII
YIII
RYIII
④ III
⑨
a
RXIII
XIII
PERON / PLATFORM
⑬
Y4
b
① 4
㉘
㉔
③
XIV
M22
Y5
④ 5
c
②
㉚
XV
b

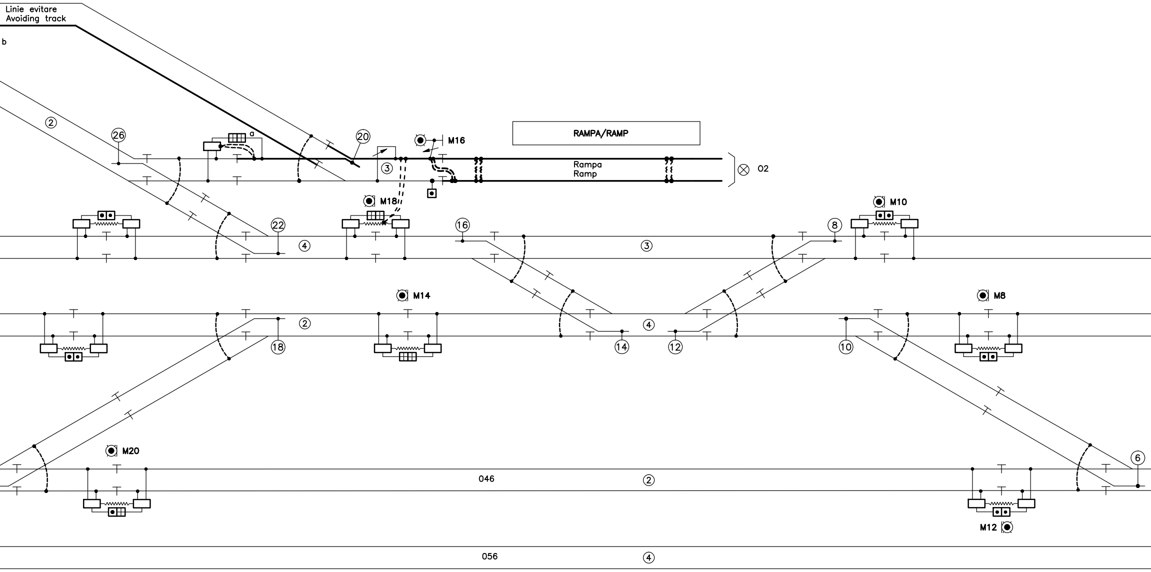
Linie evitare
Avoiding track
b
a
②
26
20
M16
RAMPA/RAMP
③
Rampa
Ramp
O2
M18
22
④
16
③
8
M10
M14
M8
②
18
④
14
12
10
M20
046
②
6
M12
056
④

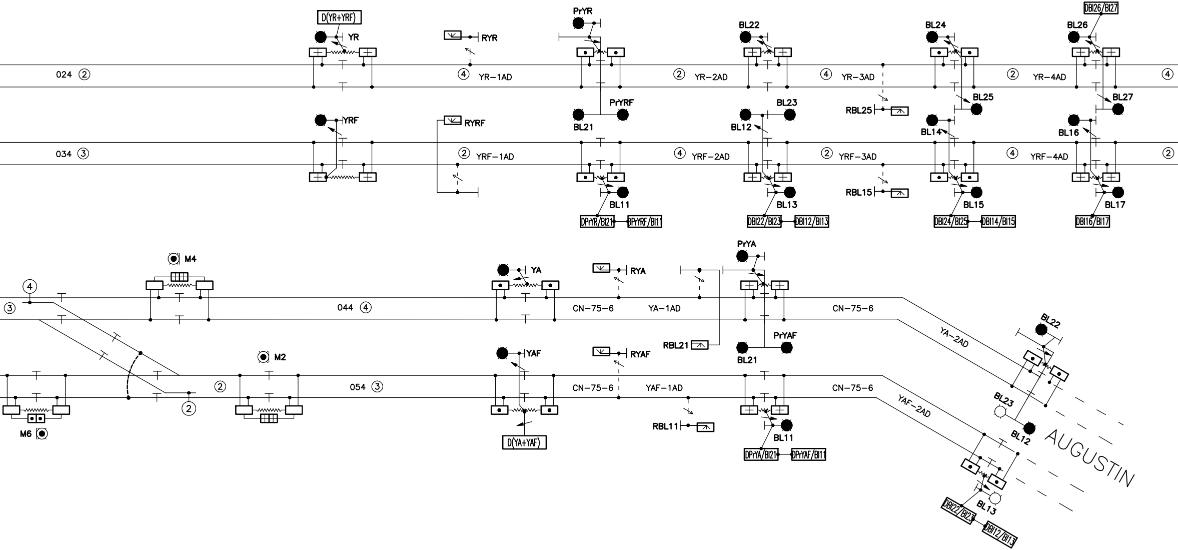
D(YR+YRF)
YR
RYR
PrYR
BL22
BL24
DBl26/Bl27
BL26
024 ②
④ YR–1AD
② YR–2AD
④ YR–3AD
② YR–4AD
④
PrYRF
BL21
BL23
BL12
RBL25
BL25
BL14
BL16
BL27
YRF
RYRF
034 ③
② YRF–1AD
④ YRF–2AD
② YRF–3AD
④ YRF–4AD
②
BL11
BL13
RBL15
BL15
BL17
DPrYR/Bl21
DPrYRF/Bl11
DBl22/Bl23
DBl12/Bl13
DBl24/Bl25
DBl14/Bl15
DBl16/Bl17
M4
④
③
044 ④
YA
RYA
PrYA
CN–75–6
YA–1AD
CN–75–6
YA–2AD
BL22
RBL21
PrYAF
BL21
M2
YAF
RYAF
②
054 ③
CN–75–6
YAF–1AD
CN–75–6
YAF–2AD
BL23
BL12
AUGUSTIN
②
M6
D(YA+YAF)
RBL11
BL11
DPrYA/Bl21
DPrYAF/Bl11
BL13
DBl22/Bl23
DBl12/Bl13

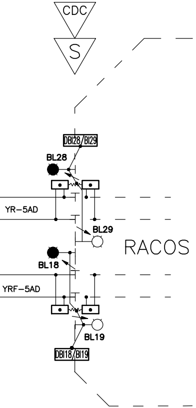
CDC
S
DBI28/BI29
BL28
YR–5AD
BL29
RACOS
BL18
YRF–5AD
BL19
DBI18/BI19

LEGENDA–SYMBOLS

●	Semnal de circulatie pe catarg Main signal on mast
◉	Semnal de manevră pe catarg Shunting signal on mast
◉	Semnal de manevră pitic Shunting signal on ground
	Semnal de avertizare rutieră cu semibarieră BAT Stop signal with half barrier on level crossing
	Joante izolante Insulated joints
	Joante izolante fără gabarit Gaugeless Insulated joints
	Linie electrificată Electrified railway
	Semnal de avertizare rutieră la TN Level crossing road signal
S	Granita instalatiei de centralizare electronica Electronic interlocking border
	Circuit de cale monofilar Single wire track circuit
	Circuit de cale bifilar Double wire track circuit
	Macaz simplu (sectiune izolată de macaz) Single switch (insulated switch section)
	Legătură de protectie (eclator) Protection connection (arrester)
	Funie de cupru de 50 mmp Copper cord 50 mmp
D(X+XF)	Dulap semnal Signal cabinet
⊗	Opritor Dead end
⊞	Cutie aparataj pentru circuit de cale cap – receptie Track circuit box – receiving end
⊡	Cutie aparataj pentru circuit de cale cap – alimentare Track circuit box – supplying end
⊞⊞	Cutie aparataj pentru circuite de cale – 2 capete receptie Track circuit box – two receiving ends
⊡⊡	Cutie aparataj pentru circuite de cale – 2 capete alimentare Track circuit box – two supplying ends
⊡⊞	Cutie aparataj pentru circuite de cale – 1 cap receptie, 1 cap alimentare Track circuit box – receiving end– supplying end
⊕	Cutie de conectare pentru terminal releu Track circuit box – receiving end
⊙	Cutie de conectare pentru terminal alimentare Track circuit box – supplying end
	Bobină de joantă Joint coil
① ②	Secventa circuitului de cale Track circuit sequence
CDC	Granita circuitelor de cale Track circuit border

D				
C				
B				
A				
Indice Index	Data Date	Modificare Modification/Revision	Proiectant Designer	

GUVERNUL ROMANIEI
ROMANIAN GOVERNMENT

PROIECT FINANȚAT DE UNI
EUROPEAN UNION FINA

CFR

C.N

CLIENT / CLIENT

ITALFERR
GRUPPO FERROVIE DELLO STATO
Joint Venture leader

Scott Wilson

OBERM
PLANEN + BERA

CONSULTANT / CONSULTANT

Aprobat Approved	Šef proiect Project manager	R. Liuzza
Aprobat Approved	Coordonator Secțiune 1 Section 1 Coordinator	C. Gambelli
Verificat Checked	Expert Cheie Key Expert	P. Amodio

SUBCONTRACTANT / SUBCONTRACTOR

AREX COMPANY

Aprobat Approved	Responsabil Subconsultant Subconsultant Responsible	A. Stanciu - Dinulescu
Întocmit Elaborated	Proiectant Designer	ing. Topala Madalin

Reabilitarea liniei de cale ferata Brașov - Simeria, parte componentă a coric
European, pentru circulația trenurilor cu viteza maximă de 160 km
Tronsonul : Brașov - Sighișoara
Rehabilitation of the railway line Brașov - Simeria, component Part of the IV
Corridor, for the trains circulation with maximum speed of 160 km
Section : Brașov - Sighișoara

Denumire desen / Drawing Title :

Statia / Station APATA
Plan bifilar de izolare
Track circuit plan

Codificare / Codification System

Scara / Scale
Fără / No scale

E	A	5	1		0	1		C		0	9		U	X		S	E		0	0

1470x297=0.4

Aprobat Consultant Approved Consultant	Aprobat CFR Approved CFR

UNEA EUROPEANĂ
NCED PROJECT

.C.F. "C.F.R." - S.A.

EYER
ATEN GmbH

TECNIC
Consulting Engineers

Data Date	Semnătură Signature
12.12.2011	
12.12.2011	
12.12.2011	
12.12.2011	
12.12.2011	

lorului IV Pan
n/h,

Pan-European
n/h,

Proiect/Project
2004/RO/16/P/PA/003

Faza / Phase:
P.Th. / T.D.

	LOT / LOT	Nr. / No 01 / 01
9	2	003 2

4mp