LEGENDA
SYMBOLS

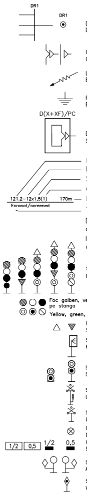

DR1
DR1
D(X+XF)/PC
121.2-12x1,5(1)
170m
Ecranat/screened
1/2
0,5
1/2
0,5

Distribuitor de cabluri
Distribution box no 1

Cap de cablu cu/fara impamantare
Cable terminal with/without earth

Legatura echipotentiala
Equipotential connection

Priza de pamant
Earth terminal

Dulap semnal/Post centralizare
Signal cabinet/Central post

Numarul cablului/Cable no.
Numar de conductoare/Total number of conductors in cable
Sectiunea conductorului/Conductor section
Conductor de rezerva/Spare conductor(s)
Lungimea cablului/Length of cable
Tipul cablului/Cable type

Daca tipul cablului nu este specificat acesta va fi considerat neecranat.

If the cable type is not specified it will be considered unscreened

Semnal de circulatie pe catarg
Main signal on mast

Foc galben, verde, rosu, alb, albastru, indicator circulatie pe stanga
Yellow, green, red, withe, blue, traffic on left indicator lamp

Indicatoare de viteza
Speed and prespeed indicators

Semnal repetitor
Repeater signal

Semnal de manevra pe catarg
Shunting signal on ground / mast

Semibariera automata cu semnal rutier la tn
Level crossing (LC) halfbarriers with road signal

Semnal rutier la trecere la nivel
Level crossing road signal

Opritor
Dead end

Inductor indusi 500Hz sau 1000/2000Hz
500Hz or 1000/2000Hz indusi inductor

Semnal BLA cu reper de avarie pentru TN
ABL signal with fix damage indicator for LC

Semnal avarie la TN
Warning signal for LC

Indice Index	Data Date	Modificare Modification/Revision	Proiectant Designer	Aprobat Consultant Approved Consultant	Aprobat CFR Approved CFR
D					
C					
B					
A					

GUVERNUL ROMANIEI
ROMANIAN GOVERNMENT

PROIECT FINANŢAT DE UNIUNEA EUROPEANĂ
EUROPEAN UNION FINANCED PROJECT

CLIENT / CLIENT

C.N.C.F. "C.F.R." - S.A.

ITALFERR
GRUPPO FERROVIE DELLO STATO
Joint Venture leader

Scott Wilson

OBERMEYER
PLANEN + BERATEN GmbH

TECNIC
Consulting Engineers

CONSULTANT / CONSULTANT

			Data Date	Semnătură Signature
Aprobat Approved	Şef proiect Project manager	R. Liuzza	01.2012	
Aprobat Approved	Coordonator Secţiune 1 Section 1 Coordinator	C. Gambelli	01.2012	
Verificat Checked	Expert Cheie Key Expert	P. Amodio	01.2012	

SUBCONTRACTANT / SUBCONTRACTOR

AREX COMPANY

Aprobat Approved	Responsabil Subconsultant Subconsultant Responsible	A. Stanciu - Dinulescu	01.2012	
Întocmit Elaborated	Proiectant Designer	ing. Juganaru Adriana	01.2012	

Reabilitarea liniei de cale ferata Brasov - Simeria, parte componentă a coridorului IV Pan European, pentru circulaţia trenurilor cu viteza maximă de 160 km/h,
Tronsonul : Braşov - Sighişoara
Rehabilitation of the railway line Braşov - Simeria, component Part of the IV Pan-European Corridor, for the trains circulation with maximum speed of 160 km/h,
Section : Braşov - Sighişoara

Proiect/Project
2004/RO/16/P/PA/003

Faza / Phase:
P.Th. / T.D.

Denumire desen / Drawing Title :

Statia / Station APATA
Plan cablaj retele cabluri dulapuri de semnale
Cable lay-out for signal cabinet

Codificare / Codification System	Scara / Scale Fără / No scale	LOT / LOT	Nr. / No 01 / 04
E A 5 1 · 0 1 · C · 0 9 · U X · S E · 0 0 · 9 · 2 · 0 1 2 · 2			

945x297=0.28mp

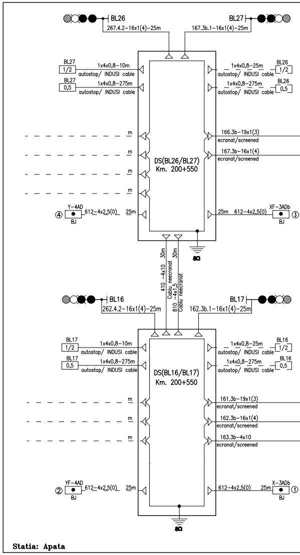

BL26
267.4.2-16x1(4)-25m
BL27
167.3b.1-16x1(4)-25m
BL27
1/2
1x4x0,8-10m
autostop/ INDUSI cable
BL27
0,5
1x4x0,8-275m
autostop/ INDUSI cable
1x4x0,8-25m
autostop/ INDUSI cable
BL26
1/2
1x4x0,8-275m
autostop/ INDUSI cable
BL26
0,5
m
m
m
m
166.3b-19x1(3)
ecranat/screened
167.3b-16x1(4)
ecranat/screened
DS(BL26/BL27)
Km. 200+550
④
Y-4AD
BJ
612-4x2,5(0)
25m
25m
612-4x2,5(0)
XF-3ADb
BJ
③
8Ω
30m
410 -4x10
Cablu neecranat
30m
810 -4x1,5
Cablu neecranat
BL16
262.4.2-16x1(4)-25m
BL17
162.3b.1-16x1(4)-25m
BL17
1/2
1x4x0,8-10m
autostop/ INDUSI cable
BL17
0,5
1x4x0,8-275m
autostop/ INDUSI cable
1x4x0,8-25m
autostop/ INDUSI cable
BL16
1/2
1x4x0,8-275m
autostop/ INDUSI cable
BL16
0,5
DS(BL16/BL17)
Km. 200+550
m
m
m
161.3b-19x1(3)
ecranat/screened
162.3b-16x1(4)
ecranat/screened
163.3b-4x10
ecranat/screened
②
YF-4AD
BJ
612-4x2,5(0)
25m
612-4x2,5(0)
25m
X-3ADb
BJ
①
8Ω

Statia: Apata

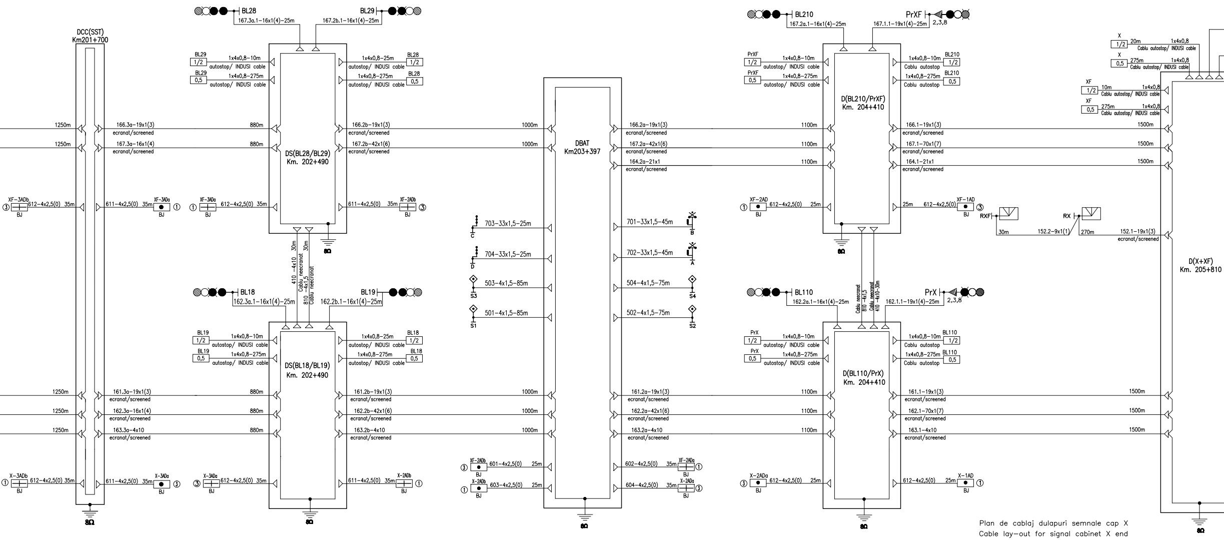
DCC(SST)
Km201+700
DS(BL28/BL29)
Km. 202+490
DS(BL18/BL19)
Km. 202+490
DBAT
Km203+397
D(BL210/PrXF)
Km. 204+410
D(BL110/PrX)
Km. 204+410
D(X+XF)
Km. 205+810
BL28
BL29
BL18
BL19
BL210
PrXF
BL110
PrX
2,3,8
RXF
RX
167.3a.1–16x1(4)–25m
167.2b.1–16x1(4)–25m
162.3a.1–16x1(4)–25m
162.2b.1–16x1(4)–25m
167.2a.1–16x1(4)–25m
167.1.1–19x1(4)–25m
162.2a.1–16x1(4)–25m
162.1.1–19x1(4)–25m
1x4x0,8–10m
1x4x0,8–25m
1x4x0,8–275m
autostop/ INDUSI cable
Cablu autostop
Cablu autostop/ INDUSI cable
1/2
0,5
166.3a–19x1(3)
167.3a–16x1(4)
166.2b–19x1(3)
167.2b–42x1(6)
166.2a–19x1(3)
167.2a–42x1(6)
164.2a–21x1
166.1–19x1(3)
167.1–70x1(7)
164.1–21x1
161.3a–19x1(3)
162.3a–16x1(4)
163.3a–4x10
161.2b–19x1(3)
162.2b–42x1(6)
163.2b–4x10
161.2a–19x1(3)
162.2a–42x1(6)
163.2a–4x10
161.1–19x1(3)
162.1–70x1(7)
163.1–4x10
152.2–9x1(1)
152.1–19x1(3)
ecranat/screened
1250m
880m
1000m
1100m
1500m
30m
270m
20m
10m
275m
611–4x2,5(0)
612–4x2,5(0)
601–4x2,5(0)
602–4x2,5(0)
603–4x2,5(0)
604–4x2,5(0)
35m
25m
XF-3ADa
XF-3ADb
X-3ADa
X-3ADb
XF-2ADa
XF-2ADb
X-2ADa
X-2ADb
XF-2AD
XF-1AD
X-1AD
BJ
①
③
410 –4x10 30m
810 –4x1,5 30m
Cablu neecranat
703–33x1,5–25m
704–33x1,5–25m
503–4x1,5–85m
501–4x1,5–85m
701–33x1,5–45m
702–33x1,5–45m
504–4x1,5–75m
502–4x1,5–75m
C
D
B
A
S1
S2
S3
S4
X
XF
8Ω

Plan de cablaj dulapuri semnale cap X
Cable lay-out for signal cabinet X end

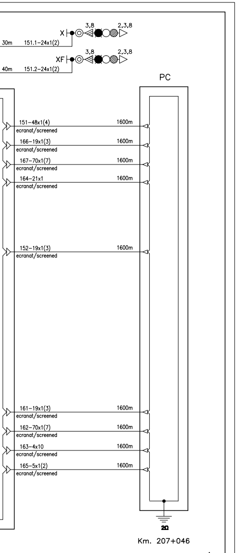
X
3,8
2,3,8
XF
3,8
2,3,8
30m
151.1–24x1(2)
40m
151.2–24x1(2)
PC
151–48x1(4)
ecranat/screened
1600m
166–19x1(3)
ecranat/screened
1600m
167–70x1(7)
ecranat/screened
1600m
164–21x1
ecranat/screened
1600m
152–19x1(3)
ecranat/screened
1600m
161–19x1(3)
ecranat/screened
1600m
162–70x1(7)
ecranat/screened
1600m
163–4x10
ecranat/screened
1600m
165–5x1(2)
ecranat/screened
1600m
2Ω
Km. 207+046

EA51 01 C 09 UX SE 009 2 012 2 02/04

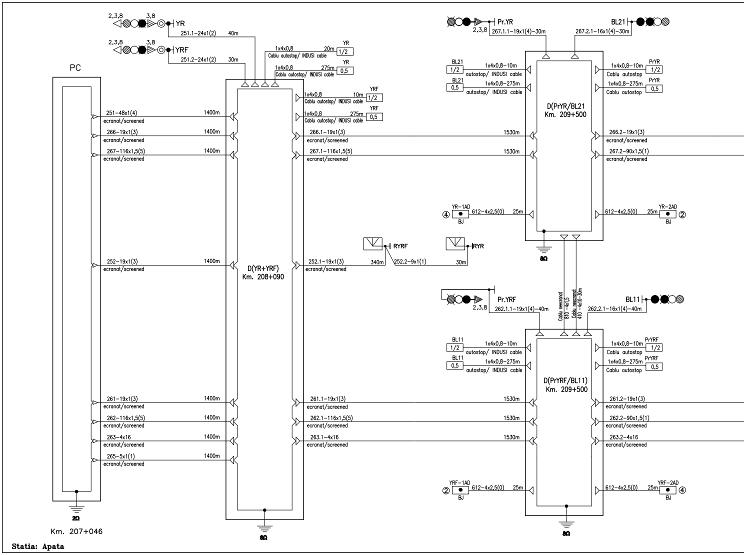
2,3,8
3,8
YR
251.1–24x1(2)
40m
2,3,8
3,8
YRF
251.2–24x1(2)
30m
1x4x0,8
20m
Cablu autostop/ INDUSI cable
YR
1/2
1x4x0,8
275m
Cablu autostop/ INDUSI cable
YR
0,5
1x4x0,8
10m
Cablu autostop/ INDUSI cable
YRF
1/2
1x4x0,8
275m
Cablu autostop/ INDUSI cable
YRF
0,5
PC
251–48x1(4)
ecranat/screened
1400m
266–19x1(3)
ecranat/screened
1400m
267–116x1,5(5)
ecranat/screened
1400m
252–19x1(3)
ecranat/screened
1400m
261–19x1(3)
ecranat/screened
1400m
262–116x1,5(5)
ecranat/screened
1400m
263–4x16
ecranat/screened
1400m
265–5x1(1)
ecranat/screened
1400m
2Ω
Km. 207+046
D(YR+YRF)
Km. 208+090
8Ω
266.1–19x1(3)
ecranat/screened
1530m
267.1–116x1,5(5)
ecranat/screened
1530m
252.1–19x1(3)
ecranat/screened
340m
RYRF
252.2–9x1(1)
30m
RYR
261.1–19x1(3)
ecranat/screened
1530m
262.1–116x1,5(5)
ecranat/screened
1530m
263.1–4x16
ecranat/screened
1530m
Pr.YR
2,3,8
267.1.1–19x1(4)–30m
BL21
267.2.1–16x1(4)–30m
BL21
1/2
1x4x0,8–10m
autostop/ INDUSI cable
BL21
0,5
1x4x0,8–275m
autostop/ INDUSI cable
1x4x0,8–10m
Cablu autostop
PrYR
1/2
1x4x0,8–275m
Cablu autostop
PrYR
0,5
D(PrYR/BL21
Km. 209+500
266.2–19x1(3)
ecranat/screened
267.2–90x1,5(1)
ecranat/screened
④
YR–1AD
BJ
612–4x2,5(0)
25m
612–4x2,5(0)
25m
YR–2AD
BJ
②
8Ω
Cablu neecranat
810 –4x1,5
Cablu neecranat
410 –4x10–30m
Pr.YRF
2,3,8
262.1.1–19x1(4)–40m
BL11
262.2.1–16x1(4)–40m
BL11
1/2
1x4x0,8–10m
autostop/ INDUSI cable
BL11
0,5
1x4x0,8–275m
autostop/ INDUSI cable
1x4x0,8–10m
Cablu autostop
PrYRF
1/2
1x4x0,8–275m
Cablu autostop
PrYRF
0,5
D(PrYRF/BL11)
Km. 209+500
261.2–19x1(3)
ecranat/screened
262.2–90x1,5(1)
ecranat/screened
263.2–4x16
ecranat/screened
②
YRF–1AD
BJ
612–4x2,5(0)
25m
612–4x2,5(0)
25m
YRF–2AD
BJ
④
8Ω

Statia: Apata

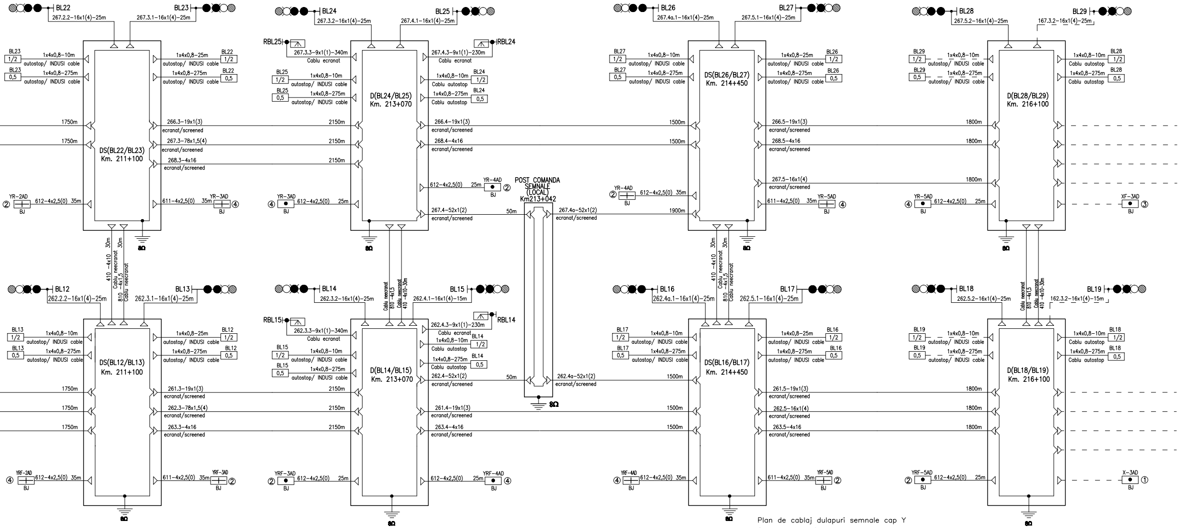
BL22
BL23
267.2.2-16x1(4)-25m
267.3.1-16x1(4)-25m
DS(BL22/BL23)
Km. 211+100
1x4x0,8-10m
1x4x0,8-275m
1x4x0,8-25m
autostop/ INDUSI cable
1/2
0,5
1750m
266.3-19x1(3)
ecranat/screened
267.3-78x1,5(4)
268.3-4x16
YR-2AD
612-4x2,5(0)
35m
611-4x2,5(0)
YR-3AD
BJ
410 -4x10 30m
810 -4x1,5 30m
Cablu neecranat
8Ω
BL24
BL25
267.3.2-16x1(4)-25m
267.4.1-16x1(4)-25m
RBL25
RBL24
267.3.3-9x1(1)-340m
267.4.3-9x1(1)-230m
Cablu ecranat
D(BL24/BL25)
Km. 213+070
Cablu autostop
2150m
266.4-19x1(3)
268.4-4x16
612-4x2,5(0)
YR-4AD
25m
267.4-52x1(2)
50m
POST COMANDA
SEMNALE
(LOCAL)
Km213+042
267.4a-52x1(2)
BL26
BL27
267.4a.1-16x1(4)-25m
267.5.1-16x1(4)-25m
DS(BL26/BL27)
Km. 214+450
1500m
1900m
266.5-19x1(3)
268.5-4x16
267.5-16x1(4)
YR-5AD
BL28
BL29
267.5.2-16x1(4)-25m
167.3.2-16x1(4)-25m
D(BL28/BL29)
Km. 216+100
1800m
XF-3AD
BL12
BL13
262.2.2-16x1(4)-25m
262.3.1-16x1(4)-25m
DS(BL12/BL13)
Km. 211+100
261.3-19x1(3)
262.3-78x1,5(4)
263.3-4x16
YRF-2AD
YRF-3AD
BL14
BL15
262.3.2-16x1(4)-25m
262.4.1-16x1(4)-15m
RBL15
RBL14
262.3.3-9x1(1)-340m
262.4.3-9x1(1)-230m
D(BL14/BL15)
Km. 213+070
262.4-52x1(2)
261.4-19x1(3)
263.4-4x16
YRF-4AD
262.4a-52x1(2)
BL16
BL17
262.4a.1-16x1(4)-25m
262.5.1-16x1(4)-25m
DS(BL16/BL17)
Km. 214+450
YRF-4AD
YRF-5AD
BL18
BL19
262.5.2-16x1(4)-25m
162.3.2-16x1(4)-15m
D(BL18/BL19)
Km. 216+100
261.5-19x1(3)
262.5-16x1(4)
263.5-4x16
X-3AD
①
②
③
④

Plan de cablaj dulapuri semnale cap Y
Cable lay-out for signal cabinet Y end

EA51 01 C 09 UX SE 009 2 012 2 03/04

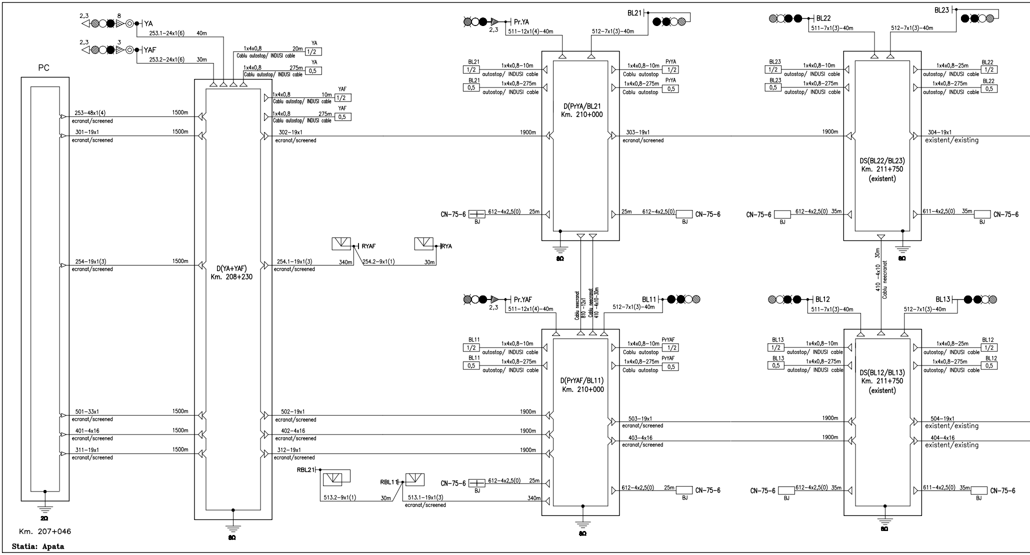
2,3
8
YA
253.1–24x1(6)
40m
2,3
3
YAF
253.2–24x1(6)
30m
1x4x0,8
20m
YA
1/2
Cablu autostop/ INDUSI cable
1x4x0,8
275m
YA
0,5
Cablu autostop/ INDUSI cable
1x4x0,8
10m
YAF
1/2
Cablu autostop/ INDUSI cable
1x4x0,8
275m
YAF
0,5
Cablu autostop/ INDUSI cable
PC
253–48x1(4)
1500m
ecranat/screened
301–19x1
1500m
ecranat/screened
302–19x1
ecranat/screened
254–19x1(3)
1500m
ecranat/screened
D(YA+YAF)
Km. 208+230
254.1–19x1(3)
ecranat/screened
340m
RYAF
254.2–9x1(1)
30m
RYA
501–33x1
1500m
ecranat/screened
401–4x16
1500m
ecranat/screened
311–19x1
1500m
ecranat/screened
502–19x1
ecranat/screened
402–4x16
ecranat/screened
312–19x1
ecranat/screened
RBL21
513.2–9x1(1)
30m
RBL11
513.1–19x1(3)
ecranat/screened
340m
2Ω
Km. 207+046
8Ω
Statia: Apata
Pr.YA
2,3
511–12x1(4)–40m
BL21
512–7x1(3)–40m
BL21
1/2
1x4x0,8–10m
autostop/ INDUSI cable
BL21
0,5
1x4x0,8–275m
autostop/ INDUSI cable
1x4x0,8–10m
Cablu autostop
PrYA
1/2
1x4x0,8–275m
Cablu autostop
PrYA
0,5
D(PrYA/BL21
Km. 210+000
1900m
303–19x1
ecranat/screened
CN-75-6
612–4x2,5(0)
25m
BJ
25m
612–4x2,5(0)
CN-75-6
BJ
8Ω
Cablu neecranat
810 –12x1
Cablu neecranat
410 –4x10–30m
Pr.YAF
2,3
511–12x1(4)–40m
BL11
512–7x1(3)–40m
BL11
1/2
1x4x0,8–10m
autostop/ INDUSI cable
BL11
0,5
1x4x0,8–275m
autostop/ INDUSI cable
1x4x0,8–10m
Cablu autostop
PrYAF
1/2
1x4x0,8–275m
Cablu autostop
PrYAF
0,5
D(PrYAF/BL11)
Km. 210+000
1900m
1900m
1900m
503–19x1
ecranat/screened
403–4x16
ecranat/screened
CN-75-6
612–4x2,5(0)
25m
BJ
612–4x2,5(0)
25m
CN-75-6
BJ
340m
8Ω
BL22
511–7x1(3)–40m
BL23
512–7x1(3)–40m
BL23
1/2
1x4x0,8–10m
autostop/ INDUSI cable
BL23
0,5
1x4x0,8–275m
autostop/ INDUSI cable
1x4x0,8–25m
autostop/ INDUSI cable
BL22
1/2
1x4x0,8–275m
autostop/ INDUSI cable
BL22
0,5
1900m
304–19x1
existent/existing
DS(BL22/BL23)
Km. 211+750
(existent)
CN-75-6
612–4x2,5(0)
35m
BJ
611–4x2,5(0)
35m
CN-75-6
BJ
8Ω
410 –4x10 30m
Cablu neecranat
BL12
511–7x1(3)–40m
BL13
512–7x1(3)–40m
BL13
1/2
1x4x0,8–10m
autostop/ INDUSI cable
BL13
0,5
1x4x0,8–275m
autostop/ INDUSI cable
1x4x0,8–25m
autostop/ INDUSI cable
BL12
1/2
1x4x0,8–275m
autostop/ INDUSI cable
BL12
0,5
DS(BL12/BL13)
Km. 211+750
(existent)
1900m
504–19x1
existent/existing
1900m
404–4x16
existent/existing
CN-75-6
612–4x2,5(0)
35m
BJ
611–4x2,5(0)
35m
CN-75-6
BJ
8Ω

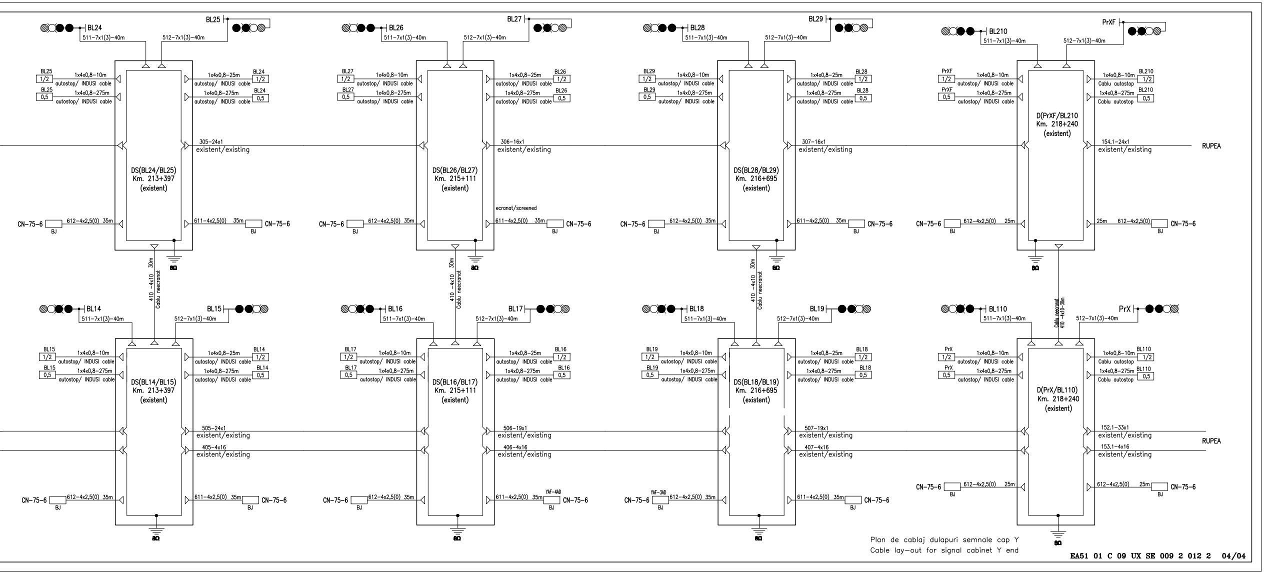
BL24
511-7x1(3)-40m
512-7x1(3)-40m
BL25
BL25 1/2 1x4x0,8-10m autostop/ INDUSI cable
BL25 0,5 1x4x0,8-275m autostop/ INDUSI cable
1x4x0,8-25m autostop/ INDUSI cable BL24 1/2
1x4x0,8-275m autostop/ INDUSI cable BL24 0,5
305-24x1 existent/existing
DS(BL24/BL25)
Km. 213+397
(existent)
CN-75-6 BJ 612-4x2,5(0) 35m
611-4x2,5(0) 35m BJ CN-75-6
410 -4x10 30m Cablu neecranat
8Ω
BL26
BL27
BL27 1/2 1x4x0,8-10m autostop/ INDUSI cable
BL27 0,5 1x4x0,8-275m autostop/ INDUSI cable
1x4x0,8-25m autostop/ INDUSI cable BL26 1/2
1x4x0,8-275m autostop/ INDUSI cable BL26 0,5
306-16x1 existent/existing
DS(BL26/BL27)
Km. 215+111
(existent)
ecranat/screened
BL28
BL29
BL29 1/2 1x4x0,8-10m autostop/ INDUSI cable
BL29 0,5 1x4x0,8-275m autostop/ INDUSI cable
1x4x0,8-25m autostop/ INDUSI cable BL28 1/2
1x4x0,8-275m autostop/ INDUSI cable BL28 0,5
307-16x1 existent/existing
DS(BL28/BL29)
Km. 216+695
(existent)
BL210
PrXF
PrXF 1/2 1x4x0,8-10m autostop/ INDUSI cable
PrXF 0,5 1x4x0,8-275m autostop/ INDUSI cable
1x4x0,8-10m Cablu autostop BL210 1/2
1x4x0,8-275m Cablu autostop BL210 0,5
D(PrXF/BL210)
Km. 218+240
(existent)
154.1-24x1 existent/existing
RUPEA
CN-75-6 BJ 612-4x2,5(0) 25m
25m 612-4x2,5(0) BJ CN-75-6
Cablu neecranat 410 -4x10-30m
BL14
BL15
BL15 1/2 1x4x0,8-10m autostop/ INDUSI cable
BL15 0,5 1x4x0,8-275m autostop/ INDUSI cable
1x4x0,8-25m autostop/ INDUSI cable BL14 1/2
1x4x0,8-275m autostop/ INDUSI cable BL14 0,5
DS(BL14/BL15)
Km. 213+397
(existent)
505-24x1 existent/existing
405-4x16 existent/existing
BL16
BL17
BL17 1/2 1x4x0,8-10m autostop/ INDUSI cable
BL17 0,5 1x4x0,8-275m autostop/ INDUSI cable
1x4x0,8-25m autostop/ INDUSI cable BL16 1/2
1x4x0,8-275m autostop/ INDUSI cable BL16 0,5
DS(BL16/BL17)
Km. 215+111
(existent)
506-19x1 existent/existing
406-4x16 existent/existing
YAF-4AD
BL18
BL19
BL19 1/2 1x4x0,8-10m autostop/ INDUSI cable
BL19 0,5 1x4x0,8-275m autostop/ INDUSI cable
1x4x0,8-25m autostop/ INDUSI cable BL18 1/2
1x4x0,8-275m autostop/ INDUSI cable BL18 0,5
DS(BL18/BL19)
Km. 216+695
(existent)
507-19x1 existent/existing
407-4x16 existent/existing
YAF-3AD
BL110
PrX
PrX 1/2 1x4x0,8-10m autostop/ INDUSI cable
PrX 0,5 1x4x0,8-275m autostop/ INDUSI cable
1x4x0,8-10m Cablu autostop BL110 1/2
1x4x0,8-275m Cablu autostop BL110 0,5
D(PrX/BL110)
Km. 218+240
(existent)
152.1-33x1 existent/existing
153.1-4x16 existent/existing
RUPEA

Plan de cablaj dulapuri semnale cap Y
Cable lay-out for signal cabinet Y end

EA51 01 C 09 UX SE 009 2 012 2 04/04