ESTE INTERZISA MODIFICAREA, INSTRAINAREA, COPIEREA SI MULTIPLICAREA ACESTOR SCHEME ELECTRICE SUB1 FORMA TIPARITA SAU ELECTRONICA, FARA APROB1AREA SCRISA A AREX, CARE ARE DREPTUL DE PROPRIETATE INTELECTUALA ASUPRA ACESTORA
AREX ISI REZERVA DREPTUL DE A MODIFICA ACESTE SCHEME ELECTRICE ATUNCI CAND ESTE NECESAR.

D					
C					
B					
A					
Indice Index	Data Date	Modificare Modification/Revision	Proiectant Designer	Aprobat Consultant Approved Consultant	Aprobat CFR Approved CFR

GUVERNUL ROMANIEI
ROMANIAN GOVERNMENT

PROIECT FINANȚAT DE UNIUNEA EUROPEANĂ
EUROPEAN UNION FINANCED PROJECT

CLIENT / CLIENT

C.N.C.F. "C.F.R." - S.A.

ITALFERR
GRUPPO FERROVIE DELLO STATO
Joint Venture leader

Scott Wilson

OBERMEYER
PLANEN + BERATEN GmbH

TECNIC
Consulting Engineers

CONSULTANT / CONSULTANT

			Data Date	Semnătură Signature
Aprobat Approved	Şef proiect Project manager	R. Liuzza	12.12.2011	
Aprobat Approved	Coordonator Secțiune 1 Section 1 Coordinator	C. Gambelli	12.12.2011	
Verificat Checked	Expert Cheie Key Expert	P. Amodio	12.12.2011	

SUBCONTRACTANT / SUBCONTRACTOR

AREX COMPANY

Aprobat Approved	Responsabil Subconsultant Subconsultant Responsible	A. Stanciu - Dinulescu	12.12.2011	
Întocmit Elaborated	Proiectant Designer	ing. Topala Madalin	12.12.2011	

Reabilitarea liniei de cale ferata Braşov - Simeria, parte componentă a coridorului IV Pan European, pentru circulația trenurilor cu viteza maximă de 160 km/h, Tronsonul : Braşov - Sighişoara

Rehabilitation of the railway line Braşov - Simeria, component Part of the IV Pan-European Corridor, for the trains circulation with maximum speed of 160 km/h, Section : Braşov - Sighişoara

Proiect/Project
2004/RO/16/P/PA/003

Faza / Phase:
D.E. / D.D.

Denumire desen / Drawing Title :

Statia / Station RACOS
Schema releelor de cale
Scheme for track circuits relays

Codificare / Codification System	Scara / Scale Fără / No scale	LOT / LOT	Nr. / No 01 / 08

EA51 01 E 11 BX SE 01 1 2 018 0

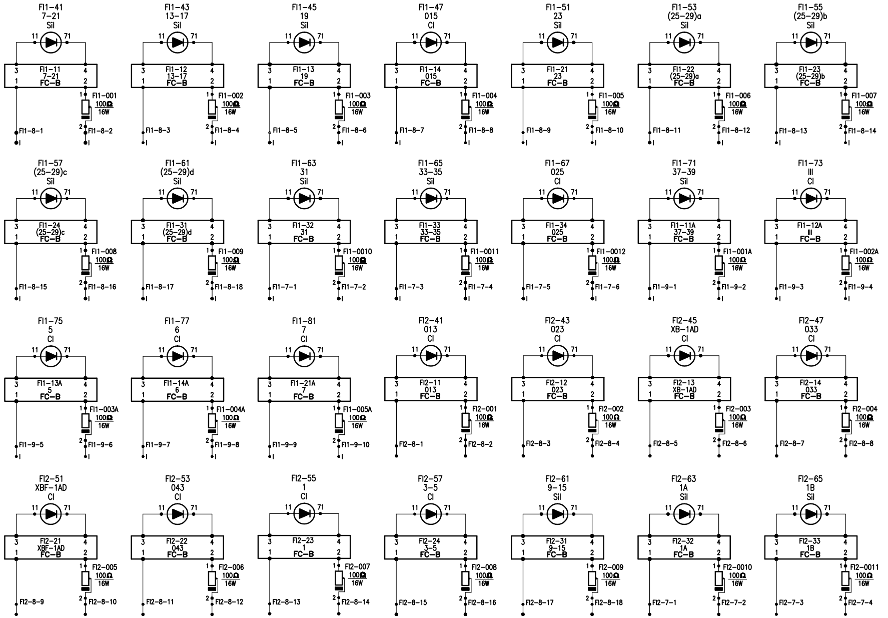
FI1-41
7-21
Sil
11
71
3
FI1-11
7-21
FC-B
4
1
2
FI1-001
100Ω
16W
FI1-8-1
FI1-8-2
FI1-43
13-17
Sil
FI1-12
13-17
FC-B
FI1-002
100Ω
16W
FI1-8-3
FI1-8-4
FI1-45
19
Sil
FI1-13
19
FC-B
FI1-003
100Ω
16W
FI1-8-5
FI1-8-6
FI1-47
015
Cl
FI1-14
015
FC-B
FI1-004
100Ω
16W
FI1-8-7
FI1-8-8
FI1-51
23
Sil
FI1-21
23
FC-B
FI1-005
100Ω
16W
FI1-8-9
FI1-8-10
FI1-53
(25-29)a
Sil
FI1-22
(25-29)a
FC-B
FI1-006
100Ω
16W
FI1-8-11
FI1-8-12
FI1-55
(25-29)b
Sil
FI1-23
(25-29)b
FC-B
FI1-007
100Ω
16W
FI1-8-13
FI1-8-14
FI1-57
(25-29)c
Sil
FI1-24
(25-29)c
FC-B
FI1-008
100Ω
16W
FI1-8-15
FI1-8-16
FI1-61
(25-29)d
Sil
FI1-31
(25-29)d
FC-B
FI1-009
100Ω
16W
FI1-8-17
FI1-8-18
FI1-63
31
Sil
FI1-32
31
FC-B
FI1-0010
100Ω
16W
FI1-7-1
FI1-7-2
FI1-65
33-35
Sil
FI1-33
33-35
FC-B
FI1-0011
100Ω
16W
FI1-7-3
FI1-7-4
FI1-67
025
Cl
FI1-34
025
FC-B
FI1-0012
100Ω
16W
FI1-7-5
FI1-7-6
FI1-71
37-39
Sil
FI1-11A
37-39
FC-B
FI1-001A
100Ω
16W
FI1-9-1
FI1-9-2
FI1-73
III
Cl
FI1-12A
III
FC-B
FI1-002A
100Ω
16W
FI1-9-3
FI1-9-4
FI1-75
5
Cl
FI1-13A
5
FC-B
FI1-003A
100Ω
16W
FI1-9-5
FI1-9-6
FI1-77
6
Cl
FI1-14A
6
FC-B
FI1-004A
100Ω
16W
FI1-9-7
FI1-9-8
FI1-81
7
Cl
FI1-21A
7
FC-B
FI1-005A
100Ω
16W
FI1-9-9
FI1-9-10
FI2-41
013
Cl
FI2-11
013
FC-B
FI2-001
100Ω
16W
FI2-8-1
FI2-8-2
FI2-43
023
Cl
FI2-12
023
FC-B
FI2-002
100Ω
16W
FI2-8-3
FI2-8-4
FI2-45
XB-1AD
Cl
FI2-13
XB-1AD
FC-B
FI2-003
100Ω
16W
FI2-8-5
FI2-8-6
FI2-47
033
Cl
FI2-14
033
FC-B
FI2-004
100Ω
16W
FI2-8-7
FI2-8-8
FI2-51
XBF-1AD
Cl
FI2-21
XBF-1AD
FC-B
FI2-005
100Ω
16W
FI2-8-9
FI2-8-10
FI2-53
043
Cl
FI2-22
043
FC-B
FI2-006
100Ω
16W
FI2-8-11
FI2-8-12
FI2-55
1
Cl
FI2-23
1
FC-B
FI2-007
100Ω
16W
FI2-8-13
FI2-8-14
FI2-57
3-5
Cl
FI2-24
3-5
FC-B
FI2-008
100Ω
16W
FI2-8-15
FI2-8-16
FI2-61
9-15
Sil
FI2-31
9-15
FC-B
FI2-009
100Ω
16W
FI2-8-17
FI2-8-18
FI2-63
1A
Sil
FI2-32
1A
FC-B
FI2-0010
100Ω
16W
FI2-7-1
FI2-7-2
FI2-65
1B
Sil
FI2-33
1B
FC-B
FI2-0011
100Ω
16W
FI2-7-3
FI2-7-4

Statia: RACOS

EA51 01 E 11 BX SE 011 2 018 0

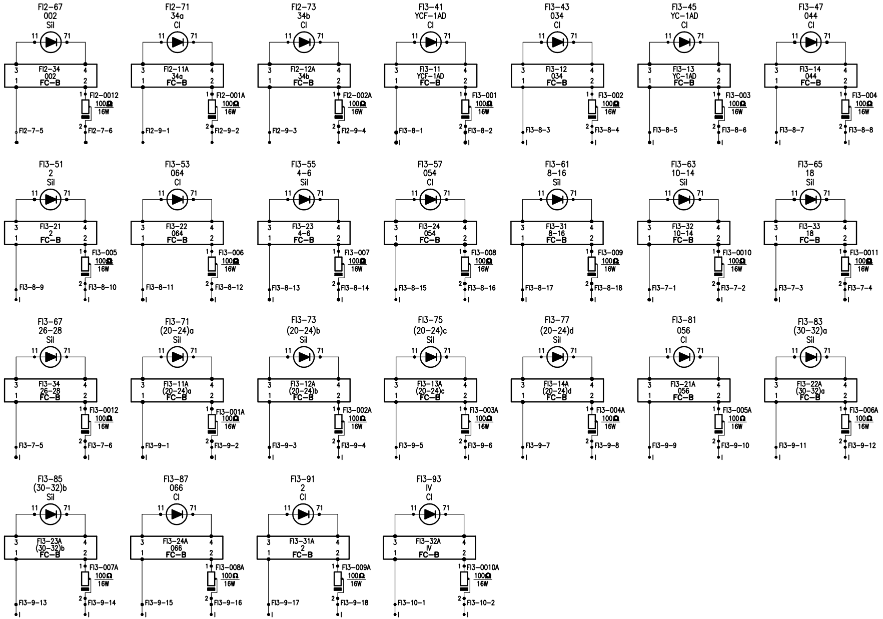
FI2-67
002
Sil
FI2-34
002
FC-B
FI2-0012
100Ω
16W
FI2-7-5
FI2-7-6
FI2-71
34a
Cl
FI2-11A
34a
FC-B
FI2-001A
100Ω
16W
FI2-9-1
FI2-9-2
FI2-73
34b
Cl
FI2-12A
34b
FC-B
FI2-002A
100Ω
16W
FI2-9-3
FI2-9-4
FI3-41
YCF-1AD
Cl
FI3-11
YCF-1AD
FC-B
FI3-001
100Ω
16W
FI3-8-1
FI3-8-2
FI3-43
034
Cl
FI3-12
034
FC-B
FI3-002
100Ω
16W
FI3-8-3
FI3-8-4
FI3-45
YC-1AD
Cl
FI3-13
YC-1AD
FC-B
FI3-003
100Ω
16W
FI3-8-5
FI3-8-6
FI3-47
044
Cl
FI3-14
044
FC-B
FI3-004
100Ω
16W
FI3-8-7
FI3-8-8
FI3-51
2
Sil
FI3-21
2
FC-B
FI3-005
100Ω
16W
FI3-8-9
FI3-8-10
FI3-53
064
Cl
FI3-22
064
FC-B
FI3-006
100Ω
16W
FI3-8-11
FI3-8-12
FI3-55
4-6
Sil
FI3-23
4-6
FC-B
FI3-007
100Ω
16W
FI3-8-13
FI3-8-14
FI3-57
054
Cl
FI3-24
054
FC-B
FI3-008
100Ω
16W
FI3-8-15
FI3-8-16
FI3-61
8-16
Sil
FI3-31
8-16
FC-B
FI3-009
100Ω
16W
FI3-8-17
FI3-8-18
FI3-63
10-14
Sil
FI3-32
10-14
FC-B
FI3-0010
100Ω
16W
FI3-7-1
FI3-7-2
FI3-65
18
Sil
FI3-33
18
FC-B
FI3-0011
100Ω
16W
FI3-7-3
FI3-7-4
FI3-67
26-28
Sil
FI3-34
26-28
FC-B
FI3-0012
100Ω
16W
FI3-7-5
FI3-7-6
FI3-71
(20-24)a
Sil
FI3-11A
(20-24)a
FC-B
FI3-001A
100Ω
16W
FI3-9-1
FI3-9-2
FI3-73
(20-24)b
Sil
FI3-12A
(20-24)b
FC-B
FI3-002A
100Ω
16W
FI3-9-3
FI3-9-4
FI3-75
(20-24)c
Sil
FI3-13A
(20-24)c
FC-B
FI3-003A
100Ω
16W
FI3-9-5
FI3-9-6
FI3-77
(20-24)d
Sil
FI3-14A
(20-24)d
FC-B
FI3-004A
100Ω
16W
FI3-9-7
FI3-9-8
FI3-81
056
Cl
FI3-21A
056
FC-B
FI3-005A
100Ω
16W
FI3-9-9
FI3-9-10
FI3-83
(30-32)a
Sil
FI3-22A
(30-32)a
FC-B
FI3-006A
100Ω
16W
FI3-9-11
FI3-9-12
FI3-85
(30-32)b
Sil
FI3-23A
(30-32)b
FC-B
FI3-007A
100Ω
16W
FI3-9-13
FI3-9-14
FI3-87
066
Cl
FI3-24A
066
FC-B
FI3-008A
100Ω
16W
FI3-9-15
FI3-9-16
FI3-91
2
Cl
FI3-31A
2
FC-B
FI3-009A
100Ω
16W
FI3-9-17
FI3-9-18
FI3-93
IV
Cl
FI3-32A
IV
FC-B
FI3-0010A
100Ω
16W
FI3-10-1
FI3-10-2

Statia: RACOS

EA51 01 E 11 BX SE 011 2 018 0 **3/6**

ESTE INTERZISA MODIFICAREA, INSTRAINAREA, COPIEREA SI MULTIPLICAREA ACESTOR SCHEME ELECTRICE SUB FORMA TIPARITA SAU ELECTRONICA, FARA APROBAREA SCRISA A AREX, CARE ARE DREPTUL DE PROPRIETATE INTELECTUALA ASUPRA ACESTORA
AREX ISI REZERVA DREPTUL DE A MODIFICA ACESTE SCHEME ELECTRICE ATUNCI CAND ESTE NECESAR.

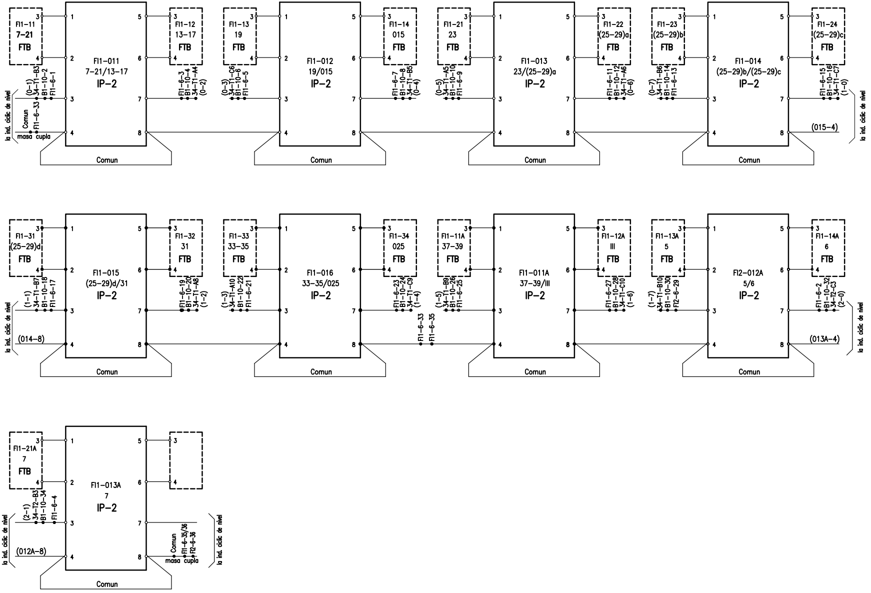
FI1-11
7-21
FTB
FI1-011
7-21/13-17
IP-2
FI1-12
13-17
FTB
FI1-13
19
FTB
FI1-012
19/015
IP-2
FI1-14
015
FTB
FI1-21
23
FTB
FI1-013
23/(25-29)a
IP-2
FI1-22
(25-29)a
FTB
FI1-23
(25-29)b
FTB
FI1-014
(25-29)b/(25-29)c
IP-2
FI1-24
(25-29)c
FTB
(0-1) 34-T1-B3 B1-10-2 FI1-6-1
Comun FI1-6-33
masa cupla
la ind. ciclic de nivel
FI1-6-3 B1-10-4 34-T1-A4 (0-2)
(0-3) 34-T1-C6 B1-10-6 FI1-6-5
FI1-6-7 B1-10-8 34-T1-B5 (0-4)
(0-5) 34-T1-A5 B1-10-10 FI1-6-9
FI1-6-11 B1-10-12 34-T1-A6 (0-6)
(0-7) 34-T1-B6 B1-10-14 FI1-6-13
FI1-6-15 B1-10-16 34-T1-C7 (1-0)
(015-4)
Comun
FI1-31
(25-29)d
FTB
FI1-015
(25-29)d/31
IP-2
FI1-32
31
FTB
FI1-33
33-35
FTB
FI1-016
33-35/025
IP-2
FI1-34
025
FTB
FI1-11A
37-39
FTB
FI1-011A
37-39/III
IP-2
FI1-12A
III
FTB
FI1-13A
5
FTB
FI2-012A
5/6
IP-2
FI1-14A
6
FTB
(1-1) 34-T1-B7 B1-10-18 FI1-6-17
(014-8)
FI1-6-19 B1-10-20 34-T1-A8 (1-2)
(1-3) 34-T1-A10 B1-10-22 FI1-6-21
FI1-6-23 B1-10-24 34-T1-C9 (1-4)
FI1-6-33
FI1-6-35
(1-5) 34-T1-B9 B1-10-26 FI1-6-25
FI1-6-27 B1-10-28 34-T1-C10 (1-6)
(1-7) 34-T1-B10 B1-10-30 FI2-6-29
FI1-6-2 B1-10-32 34-T2-C3 (2-0)
(013A-4)
FI1-21A
7
FTB
FI1-013A
7
IP-2
(2-1) 34-T2-B3 B1-10-34 FI1-6-4
(012A-8)
Comun FI1-6-35/36 FI2-6-36
masa cupla
1
2
3
4
5
6
7
8

Statia: RACOS

EA51 01 E 11 BX SE 011 2 018 0 4/6

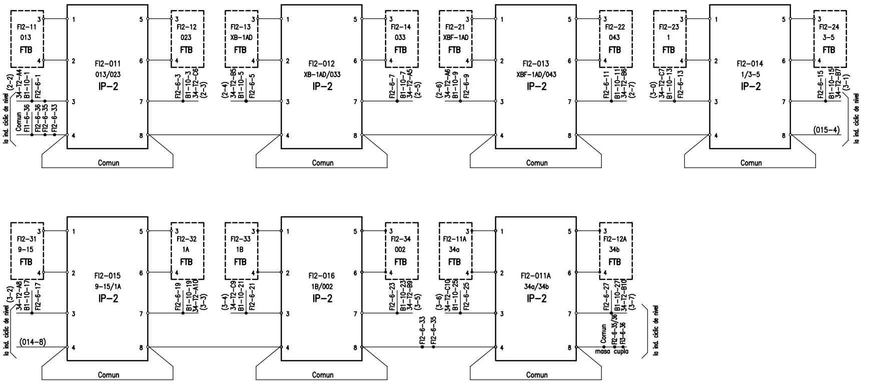
FI2-11
013
FTB
FI2-011
013/023
IP-2
FI2-12
023
FTB
FI2-13
XB-1AD
FTB
FI2-012
XB-1AD/033
IP-2
FI2-14
033
FTB
FI2-21
XBF-1AD
FTB
FI2-013
XBF-1AD/043
IP-2
FI2-22
043
FTB
FI2-23
1
FTB
FI2-014
1/3-5
IP-2
FI2-24
3-5
FTB
(2-2)
34-T2-A4
B1-10-1
FI2-6-1
Comun
FI1-6-36
FI2-6-36
FI2-6-35
FI2-6-33
la ind. ciclic de nivel
FI2-6-3
B1-10-3
34-T2-C6
(2-3)
(2-4)
34-T2-B5
B1-10-5
FI2-6-5
FI2-6-7
B1-10-7
34-T2-A5
(2-5)
(2-6)
34-T2-A6
B1-10-9
FI2-6-9
FI2-6-11
B1-10-11
34-T2-B6
(2-7)
(3-0)
34-T2-C7
B1-10-13
FI2-6-13
FI2-6-15
B1-10-15
34-T2-B7
(3-1)
(015-4)
la ind. ciclic de nivel
Comun
Comun
Comun
Comun
FI2-31
9-15
FTB
FI2-015
9-15/1A
IP-2
FI2-32
1A
FTB
FI2-33
1B
FTB
FI2-016
1B/002
IP-2
FI2-34
002
FTB
FI2-11A
34a
FTB
FI2-011A
34a/34b
IP-2
FI2-12A
34b
FTB
la ind. ciclic de nivel
(3-2)
34-T2-A8
B1-10-17
FI2-6-17
(014-8)
FI2-6-19
B1-10-19
34-T2-A10
(3-3)
(3-4)
34-T2-C9
B1-10-21
FI2-6-21
FI2-6-23
B1-10-23
34-T2-B9
(3-5)
FI2-6-33
FI2-6-35
(3-6)
34-T2-C10
B1-10-25
FI2-6-25
FI2-6-27
B1-10-27
34-T2-B10
(3-7)
Comun
FI2-6-35/36
FI3-6-36
masa
cupla
la ind. ciclic de nivel
Comun
Comun
Comun

Statia: RACOS

EA51 01 E 11 BX SE 011 2 018 0

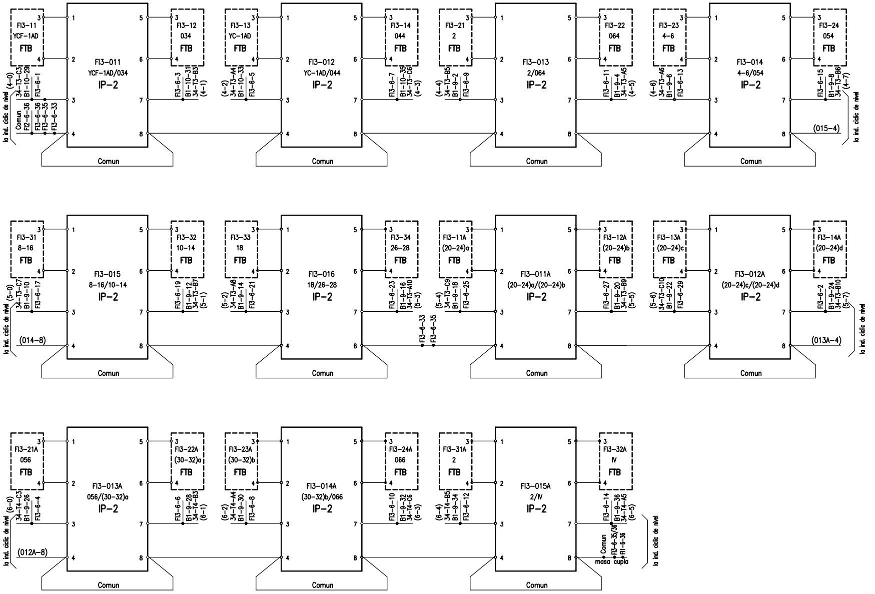
FI3-11
YCF-1AD
FTB
FI3-011
YCF-1AD/034
IP-2
FI3-12
034
FTB
FI3-13
YC-1AD
FTB
FI3-012
YC-1AD/044
IP-2
FI3-14
044
FTB
FI3-21
2
FTB
FI3-013
2/064
IP-2
FI3-22
064
FTB
FI3-23
4-6
FTB
FI3-014
4-6/054
IP-2
FI3-24
054
FTB
(4-0)
34-T3-C3
B1-10-29
FI3-6-1
Comun
FI2-6-36
FI3-6-36
FI3-6-35
FI3-6-33
FI3-6-3
B1-10-31
34-T3-B3
(4-1)
(4-2)
34-T3-A4
B1-10-33
FI3-6-5
FI3-6-7
B1-10-35
34-T3-C6
(4-3)
(4-4)
34-T3-B5
B1-9-2
FI3-6-9
FI3-6-11
B1-9-4
34-T3-A5
(4-5)
(4-6)
34-T3-A6
B1-9-6
FI3-6-13
FI3-6-15
B1-9-8
34-T3-B6
(4-7)
(015-4)
la ind. ciclic de nivel
Comun
FI3-31
8-16
FTB
FI3-015
8-16/10-14
IP-2
FI3-32
10-14
FTB
FI3-33
18
FTB
FI3-016
18/26-28
IP-2
FI3-34
26-28
FTB
FI3-11A
(20-24)a
FTB
FI3-011A
(20-24)a/(20-24)b
IP-2
FI3-12A
(20-24)b
FTB
FI3-13A
(20-24)c
FTB
FI3-012A
(20-24)c/(20-24)d
IP-2
FI3-14A
(20-24)d
FTB
(5-0)
34-T3-C7
B1-9-10
FI3-6-17
FI3-6-19
B1-9-12
34-T3-B7
(5-1)
(5-2)
34-T3-A8
B1-9-14
FI3-6-21
FI3-6-23
B1-9-16
34-T3-A10
(5-3)
FI3-6-33
FI3-6-35
(5-4)
34-T3-C9
B1-9-18
FI3-6-25
FI3-6-27
B1-9-20
34-T3-B9
(5-5)
(5-6)
34-T3-C10
B1-9-22
FI3-6-29
FI3-6-2
B1-9-24
34-T3-B10
(5-7)
(014-8)
(013A-4)
FI3-21A
056
FTB
FI3-013A
056/(30-32)a
IP-2
FI3-22A
(30-32)a
FTB
FI3-23A
(30-32)b
FTB
FI3-014A
(30-32)b/066
IP-2
FI3-24A
066
FTB
FI3-31A
2
FTB
FI3-015A
2/IV
IP-2
FI3-32A
IV
FTB
(6-0)
34-T4-C3
B1-9-26
FI3-6-4
FI3-6-6
B1-9-28
34-T4-B3
(6-1)
(6-2)
34-T4-A4
B1-9-30
FI3-6-8
FI3-6-10
B1-9-32
34-T4-C6
(6-3)
(6-4)
34-T4-B5
B1-9-34
FI3-6-12
FI3-6-14
B1-9-36
34-T4-A5
(6-5)
Comun
FI3-6-35/36
FI1-6-36
masa cupla
(012A-8)
1
2
3
4
5
6
7
8

Statia: RACOS

EA51 01 E 11 BX SE 011 2 018 0