NOTA: Acest desen nu constituie o obligatie de aplicare de către contractor.
El reprezintă doar un exemplu de circuit de cale utilizat la CFR si nu trebuie aplicat ca atare.

NOTE: It is not compulsory for the contractor to apply this drawing.
It is only an example of track circuit in use at CFR and shall not be applied as such.

| | | | | | |
|---|---|---|---|---|---|
| D | | | | | |
| C | | | | | |
| B | | | | | |
| A | | | | | |
| Indice<br>Index | Data<br>Date | Modificare<br>Modification/Revision | Proiectant<br>Designer | Aprobat Consultant<br>Approved Consultant | Aprobat CFR<br>Approved CFR |

GUVERNUL ROMANIEI
ROMANIAN GOVERNMENT

PROIECT FINANȚAT DE UNIUNEA EUROPEANĂ
EUROPEAN UNION FINANCED PROJECT

**CLIENT / CLIENT**

**C.N.C.F. "C.F.R." - S.A.**

ITALFERR
GRUPPO FERROVIE DELLO STATO
Joint Venture leader

Scott Wilson

OBERMEYER
PLANEN + BERATEN GmbH

TECNIC
Consulting Engineers

**CONSULTANT / CONSULTANT**

| | | | Data<br>Date | Semnătură<br>Signature |
|---|---|---|---|---|
| Aprobat<br>Approved | Şef proiect<br>Project manager | R. Liuzza | 12.12.2011 | |
| Aprobat<br>Approved | Coordonator Secțiune 1<br>Section 1 Coordinator | C. Gambelli | 12.12.2011 | |
| Verificat<br>Checked | Expert Cheie<br>Key Expert | P. Amodio | 12.12.2011 | |

**SUBCONTRACTANT / SUBCONTRACTOR**

AREX COMPANY

| | | | | |
|---|---|---|---|---|
| Aprobat<br>Approved | Responsabil Subconsultant<br>Subconsultant Responsible | A. Stanciu - Dinulescu | 12.12.2011 | |
| Întocmit<br>Elaborated | Proiectant<br>Designer | ing. Topala Madalin | 12.12.2011 | |

Reabilitarea liniei de cale ferata Braşov - Simeria, parte componentă a coridorului IV Pan European, pentru circulația trenurilor cu viteza maximă de 160 km/h, Tronsonul : Braşov - Sighişoara
Rehabilitation of the railway line Braşov - Simeria, component Part of the IV Pan-European Corridor, for the trains circulation with maximum speed of 160 km/h,
Section : Braşov - Sighişoara

*Proiect/Project*
*2004/RO/16/P/PA/003*

**Faza / Phase:**
**D.E. / D.D.**

**Denumire desen / Drawing Title :**

## Statia / Station RACOS
## Schemele de decodificare a circuitelor de cale
## Decoder schemes for track circuits

| Codificare / Codification System | Scara / Scale<br>Fără / No scale | LOT / LOT | Nr. / No<br>01 / 06 |
|---|---|---|---|

EA51 01 E 11 BX SE 01 1 2 019 0

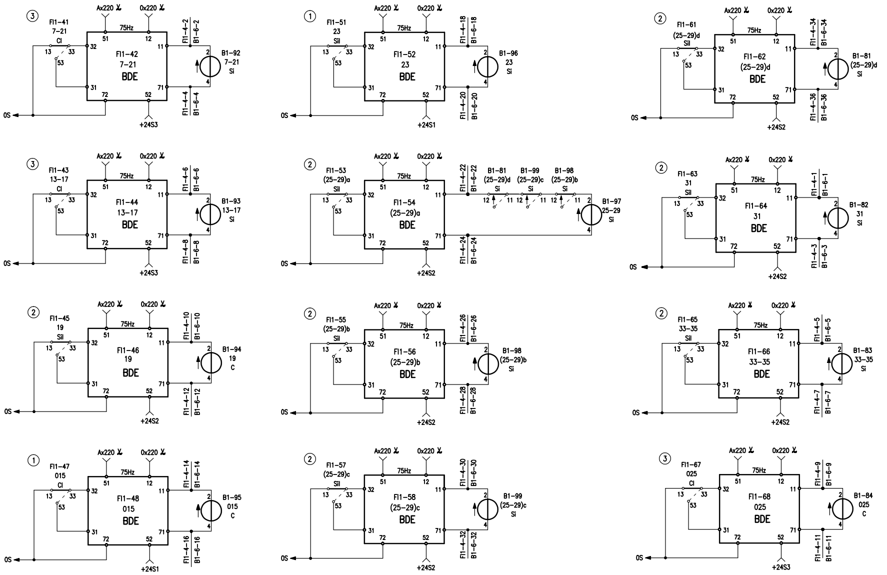
③
FI1-41
7-21
Cl
13
33
53
Ax220
0x220
75Hz
51
12
32
11
31
71
72
52
FI1-42
7-21
BDE
FI1-4-2
B1-6-2
FI1-4-4
B1-6-4
B1-92
7-21
Si
2
4
0S
+24S3
①
FI1-51
23
Sil
FI1-52
23
BDE
FI1-4-18
B1-6-18
FI1-4-20
B1-6-20
B1-96
23
Si
+24S1
②
FI1-61
(25-29)d
Sil
FI1-62
(25-29)d
BDE
FI1-4-34
B1-6-34
FI1-4-36
B1-6-36
B1-81
(25-29)d
Si
+24S2
③
FI1-43
13-17
Cl
FI1-44
13-17
BDE
FI1-4-6
B1-6-6
FI1-4-8
B1-6-8
B1-93
13-17
Si
+24S3
②
FI1-53
(25-29)a
Sil
FI1-54
(25-29)a
BDE
FI1-4-22
B1-6-22
FI1-4-24
B1-6-24
B1-81
(25-29)d
Si
B1-99
(25-29)c
Si
B1-98
(25-29)b
Si
B1-97
25-29
Si
+24S2
②
FI1-63
31
Sil
FI1-64
31
BDE
FI1-4-1
B1-6-1
FI1-4-3
B1-6-3
B1-82
31
Si
+24S2
②
FI1-45
19
Sil
FI1-46
19
BDE
FI1-4-10
B1-6-10
FI1-4-12
B1-6-12
B1-94
19
C
+24S2
②
FI1-55
(25-29)b
Sil
FI1-56
(25-29)b
BDE
FI1-4-26
B1-6-26
FI1-4-28
B1-6-28
B1-98
(25-29)b
Si
+24S2
②
FI1-65
33-35
Sil
FI1-66
33-35
BDE
FI1-4-5
B1-6-5
FI1-4-7
B1-6-7
B1-83
33-35
Si
+24S2
①
FI1-47
015
Cl
FI1-48
015
BDE
FI1-4-14
B1-6-14
FI1-4-16
B1-6-16
B1-95
015
C
+24S1
②
FI1-57
(25-29)c
Sil
FI1-58
(25-29)c
BDE
FI1-4-30
B1-6-30
FI1-4-32
B1-6-32
B1-99
(25-29)c
Si
+24S2
③
FI1-67
025
Cl
FI1-68
025
BDE
FI1-4-9
B1-6-9
FI1-4-11
B1-6-11
B1-84
025
C
+24S3

**Statia: RACOS**

**EA51 01 E 11 BX SE 011 2 019 0** **2/6**

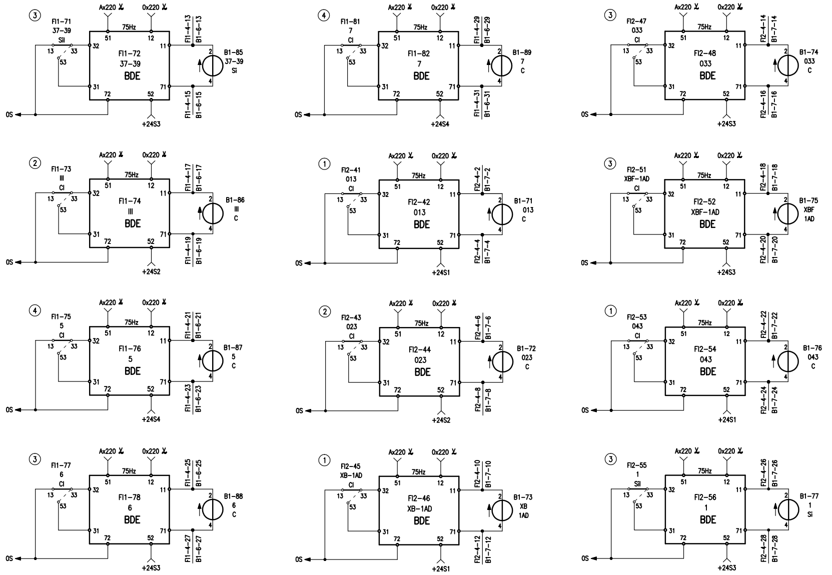
③
Fl1-71
37-39
Sil
13
33
53
Ax220
0x220
75Hz
51
12
32
11
31
71
72
52
Fl1-72
37-39
BDE
Fl1-4-13
B1-6-13
Fl1-4-15
B1-6-15
B1-85
37-39
Si
2
4
+24S3
0S
④
Fl1-81
7
Cl
Fl1-82
7
BDE
Fl1-4-29
B1-6-29
Fl1-4-31
B1-6-31
B1-89
7
C
+24S4
0S
③
Fl2-47
033
Cl
Fl2-48
033
BDE
Fl2-4-14
B1-7-14
Fl2-4-16
B1-7-16
B1-74
033
C
+24S3
0S
②
Fl1-73
III
Cl
Fl1-74
III
BDE
Fl1-4-17
B1-6-17
Fl1-4-19
B1-6-19
B1-86
III
C
+24S2
0S
①
Fl2-41
013
Cl
Fl2-42
013
BDE
Fl2-4-2
B1-7-2
Fl2-4-4
B1-7-4
B1-71
013
C
+24S1
0S
③
Fl2-51
XBF-1AD
Cl
Fl2-52
XBF-1AD
BDE
Fl2-4-18
B1-7-18
Fl2-4-20
B1-7-20
B1-75
XBF
1AD
+24S3
0S
④
Fl1-75
5
Cl
Fl1-76
5
BDE
Fl1-4-21
B1-6-21
Fl1-4-23
B1-6-23
B1-87
5
C
+24S4
0S
②
Fl2-43
023
Cl
Fl2-44
023
BDE
Fl2-4-6
B1-7-6
Fl2-4-8
B1-7-8
B1-72
023
C
+24S2
0S
①
Fl2-53
043
Cl
Fl2-54
043
BDE
Fl2-4-22
B1-7-22
Fl2-4-24
B1-7-24
B1-76
043
C
+24S1
0S
③
Fl1-77
6
Cl
Fl1-78
6
BDE
Fl1-4-25
B1-6-25
Fl1-4-27
B1-6-27
B1-88
6
C
+24S3
0S
①
Fl2-45
XB-1AD
Cl
Fl2-46
XB-1AD
BDE
Fl2-4-10
B1-7-10
Fl2-4-12
B1-7-12
B1-73
XB
1AD
+24S1
0S
③
Fl2-55
1
Sil
Fl2-56
1
BDE
Fl2-4-26
B1-7-26
Fl2-4-28
B1-7-28
B1-77
1
Si
+24S3
0S

**Statia: RACOS**

**EA51 01 E 11 BX SE 011 2 019 0** **3/6**

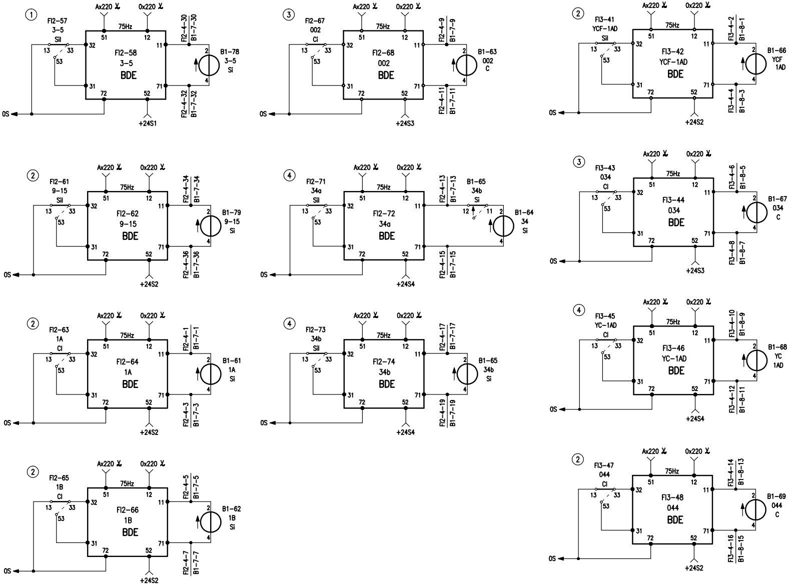
①
Fl2-57
3-5
Sil
13
33
53
Ax220
0x220
75Hz
51
12
32
11
Fl2-58
3-5
BDE
31
71
72
52
+24S1
Fl2-4-30
B1-7-30
Fl2-4-32
B1-7-32
B1-78
3-5
Si
2
4
0S
③
Fl2-67
002
Ci
Fl2-68
002
BDE
+24S3
Fl2-4-9
B1-7-9
Fl2-4-11
B1-7-11
B1-63
002
C
②
Fl3-41
YCF-1AD
Sil
Fl3-42
YCF-1AD
BDE
+24S2
Fl3-4-2
B1-8-1
Fl3-4-4
B1-8-3
B1-66
YCF
1AD
②
Fl2-61
9-15
Sil
Fl2-62
9-15
BDE
+24S2
Fl2-4-34
B1-7-34
Fl2-4-36
B1-7-36
B1-79
9-15
Si
④
Fl2-71
34a
Sil
Fl2-72
34a
BDE
+24S4
Fl2-4-13
B1-7-13
Fl2-4-15
B1-7-15
B1-65
34b
Si
B1-64
34
Si
③
Fl3-43
034
Cl
Fl3-44
034
BDE
+24S3
Fl3-4-6
B1-8-5
Fl3-4-8
B1-8-7
B1-67
034
C
②
Fl2-63
1A
Cl
Fl2-64
1A
BDE
+24S2
Fl2-4-1
B1-7-1
Fl2-4-3
B1-7-3
B1-61
1A
Si
④
Fl2-73
34b
Sil
Fl2-74
34b
BDE
+24S4
Fl2-4-17
B1-7-17
Fl2-4-19
B1-7-19
B1-65
34b
Si
④
Fl3-45
YC-1AD
Cl
Fl3-46
YC-1AD
BDE
+24S4
Fl3-4-10
B1-8-9
Fl3-4-12
B1-8-11
B1-68
YC
1AD
②
Fl2-65
1B
Cl
Fl2-66
1B
BDE
+24S2
Fl2-4-5
B1-7-5
Fl2-4-7
B1-7-7
B1-62
1B
Si
②
Fl3-47
044
Cl
Fl3-48
044
BDE
+24S2
Fl3-4-14
B1-8-13
Fl3-4-16
B1-8-15
B1-69
044
C

**Statia: RACOS**

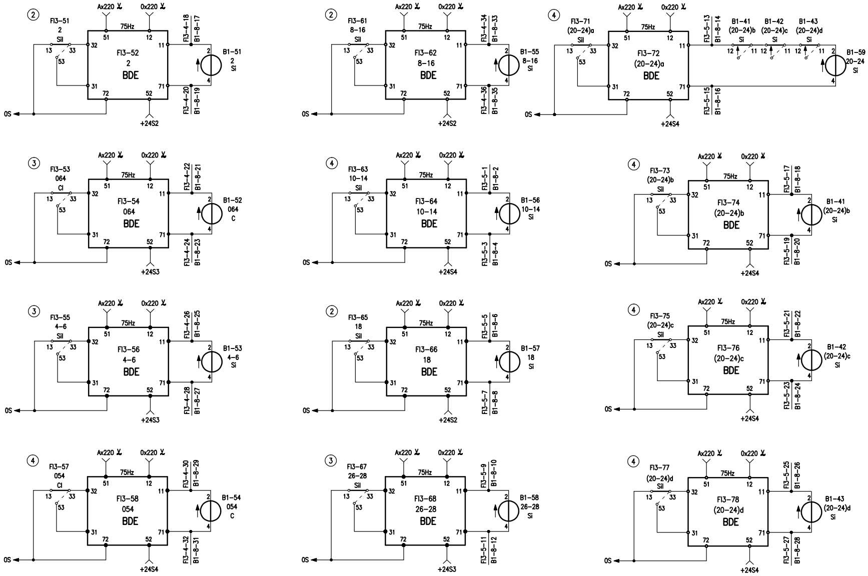
② Fl3–51 2 Sil 13 33 53 Ax220 0x220 75Hz 51 12 32 11 31 71 72 52 Fl3–52 2 BDE Fl3–4–18 B1–8–17 Fl3–4–20 B1–8–19 B1–51 2 Si 2 4 0S +24S2
② Fl3–61 8–16 Sil 13 33 53 Ax220 0x220 75Hz 51 12 32 11 31 71 72 52 Fl3–62 8–16 BDE Fl3–4–34 B1–8–33 Fl3–4–36 B1–8–35 B1–55 8–16 Si 2 4 0S +24S2
④ Fl3–71 (20–24)a Sil 13 33 53 Ax220 0x220 75Hz 51 12 32 11 31 71 72 52 Fl3–72 (20–24)a BDE Fl3–5–13 B1–8–14 Fl3–5–15 B1–8–16 B1–41 (20–24)b Si 12 11 B1–42 (20–24)c Si 12 11 B1–43 (20–24)d Si 12 11 B1–59 20–24 Si 2 4 0S +24S4
③ Fl3–53 064 Cl 13 33 53 Ax220 0x220 75Hz 51 12 32 11 31 71 72 52 Fl3–54 064 BDE Fl3–4–22 B1–8–21 Fl3–4–24 B1–8–23 B1–52 064 C 2 4 0S +24S3
④ Fl3–63 10–14 Sil 13 33 53 Ax220 0x220 75Hz 51 12 32 11 31 71 72 52 Fl3–64 10–14 BDE Fl3–5–1 B1–8–2 Fl3–5–3 B1–8–4 B1–56 10–14 Si 2 4 0S +24S4
④ Fl3–73 (20–24)b Sil 13 33 53 Ax220 0x220 75Hz 51 12 32 11 31 71 72 52 Fl3–74 (20–24)b BDE Fl3–5–17 B1–8–18 Fl3–5–19 B1–8–20 B1–41 (20–24)b Si 2 4 0S +24S4
③ Fl3–55 4–6 Sil 13 33 53 Ax220 0x220 75Hz 51 12 32 11 31 71 72 52 Fl3–56 4–6 BDE Fl3–4–26 B1–8–25 Fl3–4–28 B1–8–27 B1–53 4–6 Si 2 4 0S +24S3
② Fl3–65 18 Sil 13 33 53 Ax220 0x220 75Hz 51 12 32 11 31 71 72 52 Fl3–66 18 BDE Fl3–5–5 B1–8–6 Fl3–5–7 B1–8–8 B1–57 18 Si 2 4 0S +24S2
④ Fl3–75 (20–24)c Sil 13 33 53 Ax220 0x220 75Hz 51 12 32 11 31 71 72 52 Fl3–76 (20–24)c BDE Fl3–5–21 B1–8–22 Fl3–5–23 B1–8–24 B1–42 (20–24)c Si 2 4 0S +24S4
④ Fl3–57 054 Cl 13 33 53 Ax220 0x220 75Hz 51 12 32 11 31 71 72 52 Fl3–58 054 BDE Fl3–4–30 B1–8–29 Fl3–4–32 B1–8–31 B1–54 054 C 2 4 0S +24S4
③ Fl3–67 26–28 Sil 13 33 53 Ax220 0x220 75Hz 51 12 32 11 31 71 72 52 Fl3–68 26–28 BDE Fl3–5–9 B1–8–10 Fl3–5–11 B1–8–12 B1–58 26–28 Si 2 4 0S +24S3
④ Fl3–77 (20–24)d Sil 13 33 53 Ax220 0x220 75Hz 51 12 32 11 31 71 72 52 Fl3–78 (20–24)d BDE Fl3–5–25 B1–8–26 Fl3–5–27 B1–8–28 B1–43 (20–24)d Si 2 4 0S +24S4

**Statia: RACOS**

**EA51 01 E 11 BX SE 011 2 019 0** **5/6**

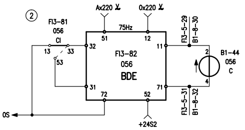
②
FI3-81
056
Cl
13
33
53
Ax220
0x220
75Hz
51
12
32
11
FI3-82
056
BDE
31
71
72
52
0S
+24S2
FI3-5-29
B1-8-30
FI3-5-31
B1-8-32
B1-44
056
C
2
4

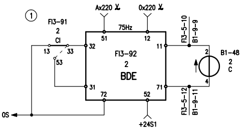
①
FI3-91
2
Cl
13
33
53
Ax220
0x220
75Hz
51
12
32
11
FI3-92
2
BDE
31
71
72
52
0S
+24S1
FI3-5-10
B1-9-9
FI3-5-12
B1-9-11
B1-48
2
C
2
4

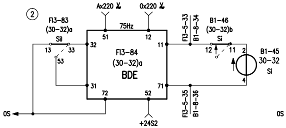
②
FI3-83
(30-32)a
SiI
13
33
53
Ax220
0x220
75Hz
51
12
32
11
FI3-84
(30-32)a
BDE
31
71
72
52
0S
+24S2
FI3-5-33
B1-8-34
B1-46
(30-32)b
Si
12
11
FI3-5-35
B1-8-36
B1-45
30-32
Si
2
4

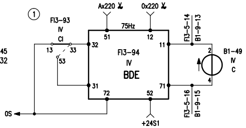
①
FI3-93
IV
Cl
13
33
53
Ax220
0x220
75Hz
51
12
32
11
FI3-94
IV
BDE
31
71
72
52
0S
+24S1
FI3-5-14
B1-9-13
FI3-5-16
B1-9-15
B1-49
IV
C
2
4

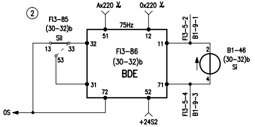
②
FI3-85
(30-32)b
SiI
13
33
53
Ax220
0x220
75Hz
51
12
32
11
FI3-86
(30-32)b
BDE
31
71
72
52
0S
+24S2
FI3-5-2
B1-9-1
FI3-5-4
B1-9-3
B1-46
(30-32)b
Si
2
4

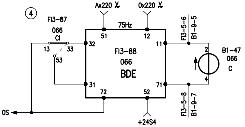
④
FI3-87
066
Cl
13
33
53
Ax220
0x220
75Hz
51
12
32
11
FI3-88
066
BDE
31
71
72
52
0S
+24S4
FI3-5-6
B1-9-5
FI3-5-8
B1-9-7
B1-47
066
C
2
4

**Statia: RACOS**

**EA51 01 E 11 BX SE 011 2 019 0**